External Fixators, Pins & K-Wires

AXN Ortho



Manufacturer, Supplier and Exporter of Orthopaedic Implants & Instruments

AXN Ortho • Kaushik Enclave, Burari, New Delhi - 110084 • +91 9958514586 • orthoaxn@gmail.com • **www.axnortho.com**

150	119	31	153
TOTAL PRODUCTS	MIRROR-SHINE PHOTOS	IMAGE REQUIRED	TOTAL CATALOGUE PAGES

SEC	EXTERNAL FIXATION & PIN/WIRE CATEGORY	PRODUCTS	PAGE RANGE	PHOTOS
Sec 01	Large & Medium Tubular External Fixator Systems (11.0 mm & 8.0 mm)	#001 – #016	Pg 003 – 018	13 / 16
Sec 02	Small & Mini Tubular External Fixators (4.0 mm & 5.0 mm Forearm / Hand / Wrist)	#017 – #030	Pg 019 – 032	8 / 14
Sec 03	Limb Reconstruction System (LRS) Monolateral Rail Fixators & Clamps	#031 – #048	Pg 033 – 050	13 / 18
Sec 04	Dynamic Ball-and-Socket Joint External Fixators (Wrist, Elbow, Ankle & Pelvis)	#049 – #061	Pg 051 – 063	13 / 13
Sec 05	Ilizarov Circular Ring Fixators — Rings, 5/8th Rings, Foot Rings & Arches	#062 – #079	Pg 064 – 081	17 / 18
Sec 06	Ilizarov Hinges, Posts, Rods, Lengthening Fixators & Connection Plates	#080 – #096	Pg 082 – 098	17 / 17
Sec 07	Hybrid External Fixator Clamps, Rancho Cubes & Ring Hardware	#097 – #112	Pg 099 – 114	15 / 16
Sec 08	Kirschner Wires (K-Wires), Steinmann Pins & Schanz Half-Pins	#113 – #139	Pg 115 – 141	12 / 27
Sec 09	Ilizarov / Olive Wires, Guide Wires, Cerclage Wires & Cables	#140 – #150	Pg 142 – 152	11 / 11

Carbon Fiber & Anodized Aluminum Frames

Radiolucent carbon-fiber rods & Ilizarov rings reduce frame weight by >50% with unobstructed intraoperative C-arm fluoroscopy.

SS 316L & Titanium Ti-6Al-4V ELI (ASTM F138 / F136)

Spring-tempered & annealed SS 316L plus MRI-conditional Titanium Schanz pins, K-wires, HA-coated pins & precision clamps.

Carbon Fiber Connecting Rod — 11.0 mm Dia. (Radiolucent)

001

Primary Use : Enables clear C-arm fracture visualization across the entire construct.
Material : Medical Carbon Fiber (Radiolucent) • **Spec:** Ø 11.0 mm; lengths 100, 150, 200, 250, 300, 350, 400, 500 mm

TITANIUM / CARBON (Prod. Code)	SS. 316L (Prod. Code)	SPECIFICATION (Diameter / Length)
[Assign Code]	[Assign Code]	150 mm
[Assign Code]	[Assign Code]	200 mm
[Assign Code]	[Assign Code]	250 mm
[Assign Code]	[Assign Code]	300 mm
[Assign Code]	[Assign Code]	350 mm
[Assign Code]	[Assign Code]	400 mm

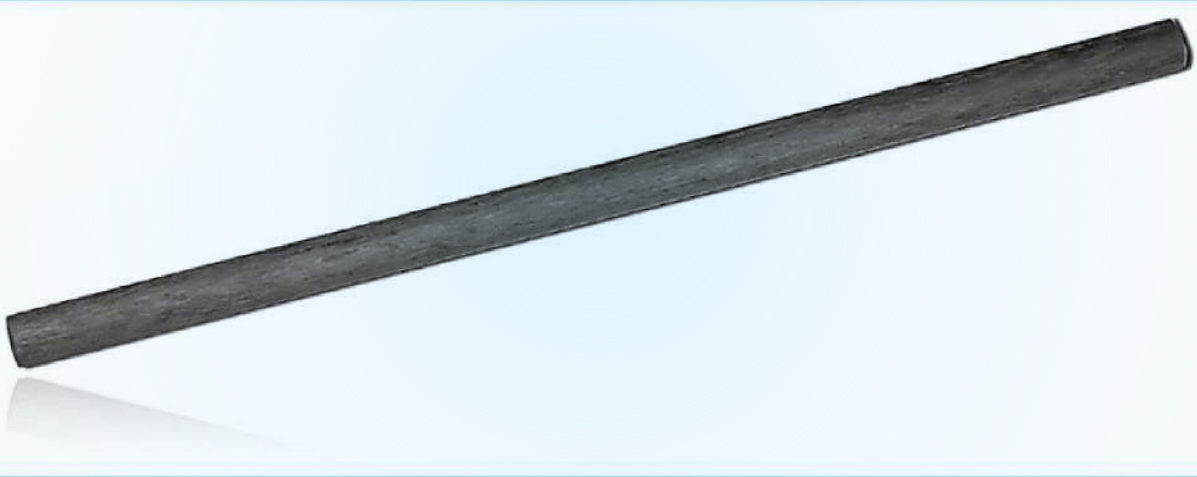

Tubular Connecting Rod — 11.0 mm Dia. (Stainless Steel 316L)

002

Primary Use : Maximum frame rigidity for adult femoral and tibial trauma frames.
Material : SS 316L (ASTM F138 / ISO 5832-1) • **Spec:** Ø 11.0 mm; lengths 100 – 500 mm (50 mm increments)

TITANIUM / CARBON (Prod. Code)	SS. 316L (Prod. Code)	SPECIFICATION (Diameter / Length)
[Assign Code]	[Assign Code]	150 mm
[Assign Code]	[Assign Code]	200 mm
[Assign Code]	[Assign Code]	250 mm
[Assign Code]	[Assign Code]	300 mm
[Assign Code]	[Assign Code]	350 mm
[Assign Code]	[Assign Code]	400 mm

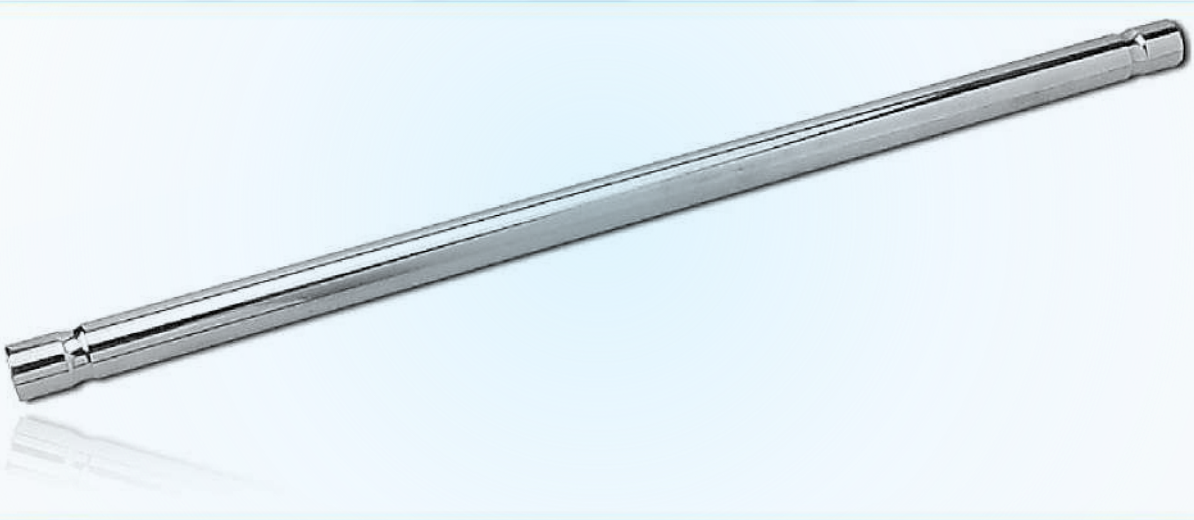

Clip-On Self-Holding Combination Clamp (11.0 mm × 4.0–6.0 mm)

003

Primary Use : Accelerates rapid polytrauma damage-control frame construction.
Material : SS 316L / Anodized Aluminum • **Spec:** Fits Ø 11.0 mm rod & Ø 4.0 – 6.0 mm Schanz pins

TITANIUM / CARBON (Prod. Code)	SS. 316L (Prod. Code)	SPECIFICATION (Diameter / Length)
[Assign Code]	[Assign Code]	Standard Size
[Assign Code]	[Assign Code]	Medium Profile
[Assign Code]	[Assign Code]	Large Profile
[Assign Code]	[Assign Code]	Heavy-Duty Variant

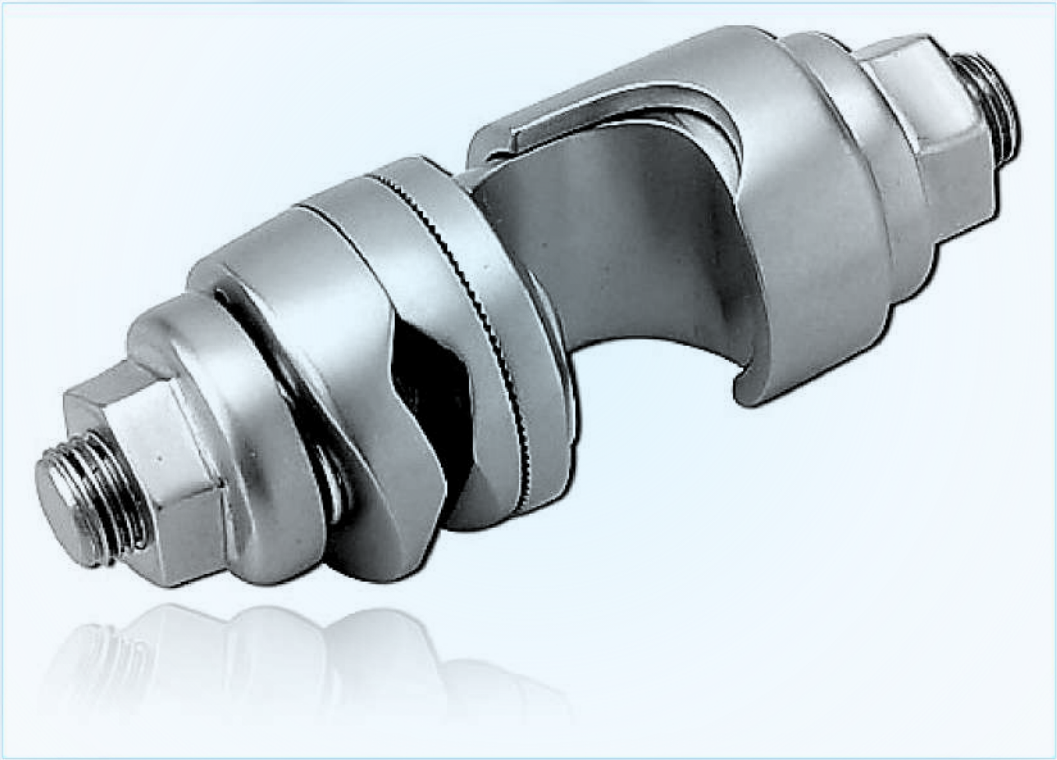

Single-Pin Clamp — Deluxe (11.0 mm Rod to Pin)

004

Primary Use : Provides 360° angular adjustability without frame disassembly.
Material : SS 316L & Titanium Hardware • **Spec:** Accepts Ø 11.0 mm rod & Ø 4.0 – 6.0 mm Schanz pins

TITANIUM / CARBON (Prod. Code)	SS. 316L (Prod. Code)	SPECIFICATION (Diameter / Length)
[Assign Code]	[Assign Code]	Standard Size
[Assign Code]	[Assign Code]	Medium Profile
[Assign Code]	[Assign Code]	Large Profile
[Assign Code]	[Assign Code]	Heavy-Duty Variant

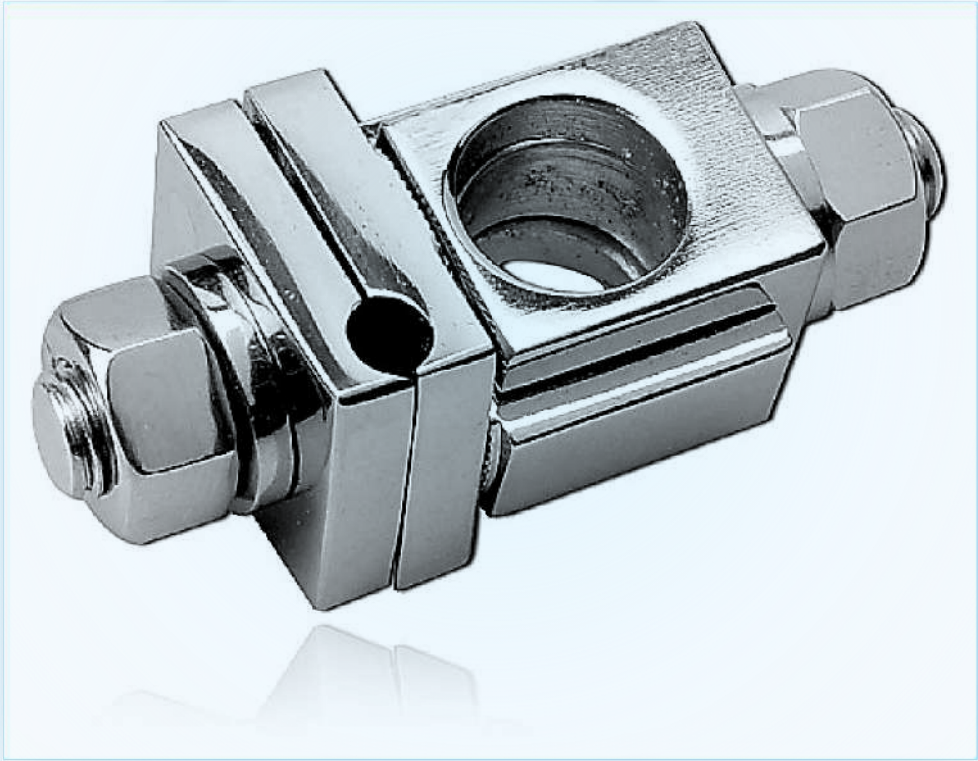

Single-Pin Clamp — Standard (11.0 mm System)

005

Primary Use : Dependable economy clamp for standard tibial and femoral frames.
Material : Stainless Steel 316L • **Spec:** Accepts Ø 11.0 mm rod & Ø 4.0 – 6.0 mm Schanz pins

TITANIUM / CARBON (Prod. Code)	SS. 316L (Prod. Code)	SPECIFICATION (Diameter / Length)
[Assign Code]	[Assign Code]	Standard Size
[Assign Code]	[Assign Code]	Medium Profile
[Assign Code]	[Assign Code]	Large Profile
[Assign Code]	[Assign Code]	Heavy-Duty Variant

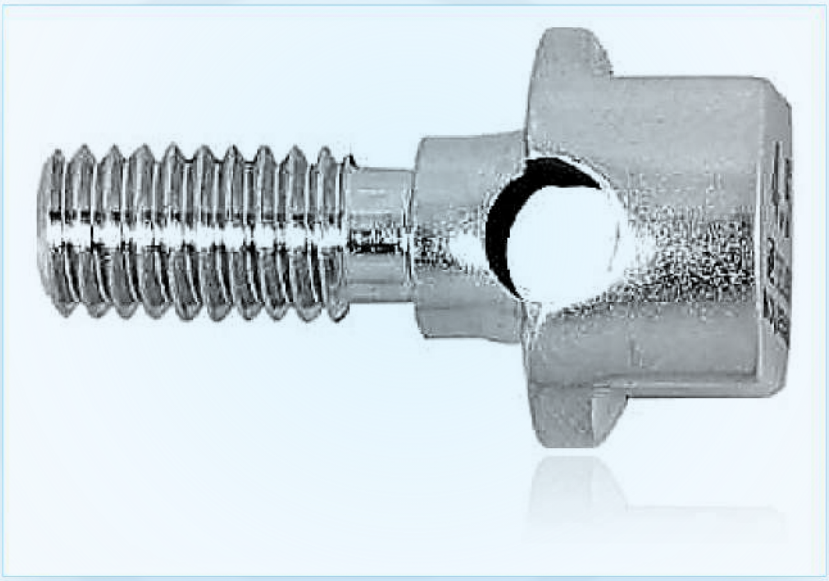

Open Single-Pin Clamp (Snap-On 11.0 mm System)

006

Primary Use : Allows adding supplementary pins mid-surgery without removing end clamps.
Material : Stainless Steel 316L • **Spec:** Accepts Ø 11.0 mm rod & Ø 4.0 – 6.0 mm Schanz pins

TITANIUM / CARBON (Prod. Code)	SS. 316L (Prod. Code)	SPECIFICATION (Diameter / Length)
[Assign Code]	[Assign Code]	Standard Size
[Assign Code]	[Assign Code]	Medium Profile
[Assign Code]	[Assign Code]	Large Profile
[Assign Code]	[Assign Code]	Heavy-Duty Variant

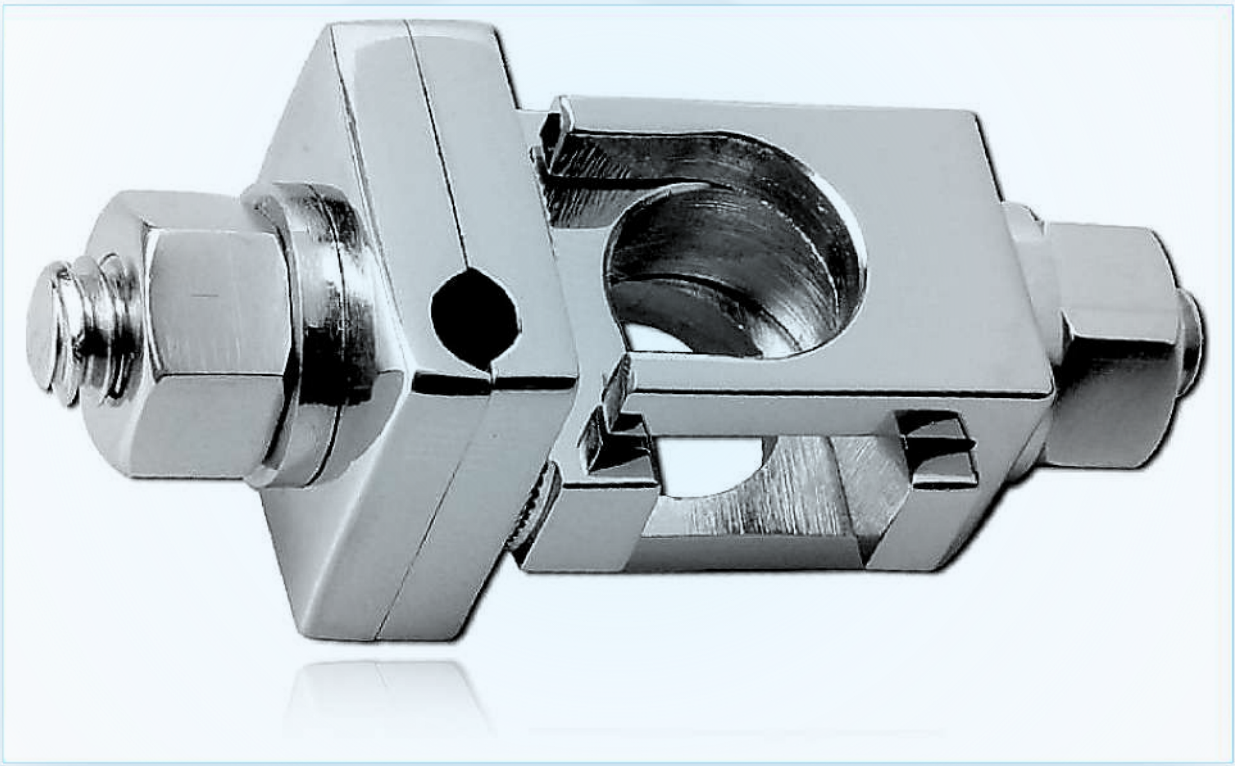

Double-Pin Clamp (Dual Schanz Pin to 11.0 mm Rod)

007

Primary Use : Ideal for proximal or distal shaft clusters requiring rigid parallel hold.
Material : Stainless Steel 316L • **Spec:** Dual pin seats (Ø 4.0 – 6.0 mm) to Ø 11.0 mm rod

TITANIUM / CARBON (Prod. Code)	SS. 316L (Prod. Code)	SPECIFICATION (Diameter / Length)
[Assign Code]	[Assign Code]	Standard Size
[Assign Code]	[Assign Code]	Medium Profile
[Assign Code]	[Assign Code]	Large Profile
[Assign Code]	[Assign Code]	Heavy-Duty Variant

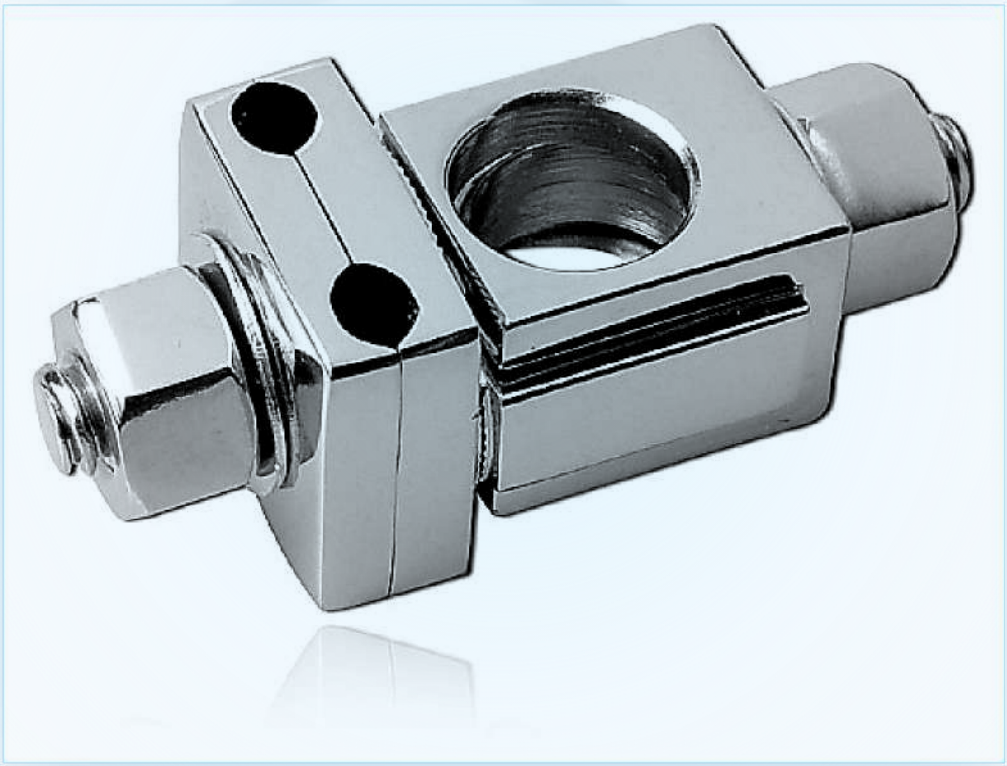

Tube-to-Tube Clamp (11.0 mm × 11.0 mm Rod Coupling)

008

Primary Use : Core connector for modular two-stage fracture reduction frames.
Material : SS 316L / Aluminum Alloy • **Spec:** Couples two Ø 11.0 mm tubular or carbon-fiber rods

TITANIUM / CARBON (Prod. Code)	SS. 316L (Prod. Code)	SPECIFICATION (Diameter / Length)
[Assign Code]	[Assign Code]	Standard Size
[Assign Code]	[Assign Code]	Medium Profile
[Assign Code]	[Assign Code]	Large Profile
[Assign Code]	[Assign Code]	Heavy-Duty Variant



Twin Adjustable Clamp (Dual-Rod Parallel / Angled)

009

Primary Use : Reinforces unstable open fractures and knee-spanning constructs.
Material : Stainless Steel 316L • **Spec:** Fits Ø 11.0 mm rods & Ø 4.0 – 6.0 mm pins

TITANIUM / CARBON (Prod. Code)	SS. 316L (Prod. Code)	SPECIFICATION (Diameter / Length)
[Assign Code]	[Assign Code]	Standard Size
[Assign Code]	[Assign Code]	Medium Profile
[Assign Code]	[Assign Code]	Large Profile
[Assign Code]	[Assign Code]	Heavy-Duty Variant

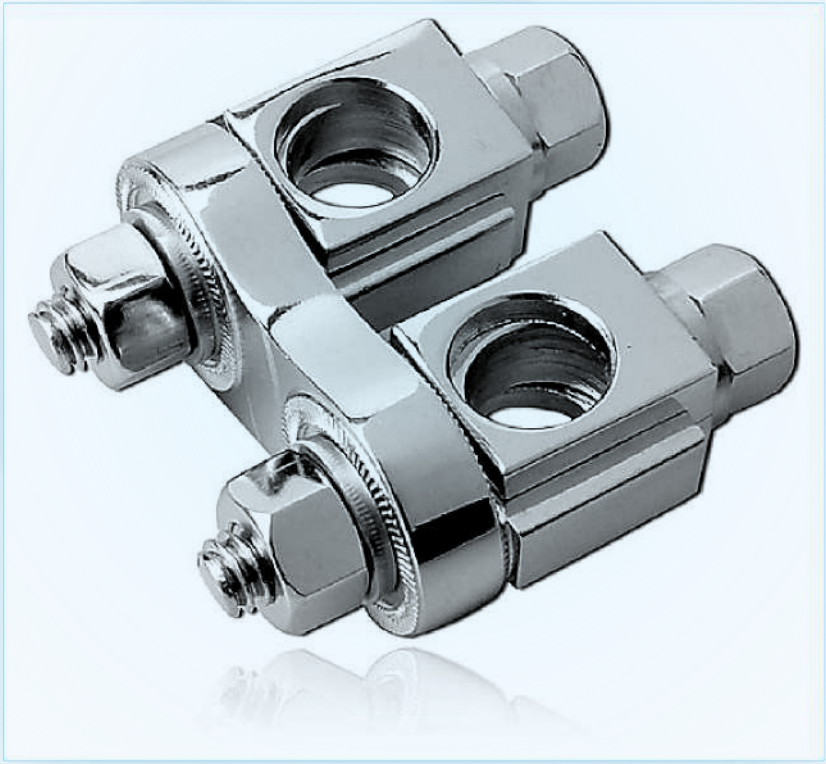

Transverse Connecting Clamp (Cross-Bar Coupling)

010

Primary Use : Eliminates frame parallelogram shear in heavy adult lower-limb trauma.
Material : Stainless Steel 316L • **Spec:** Fits Ø 11.0 mm rods; 90° transverse cross-link

TITANIUM / CARBON (Prod. Code)	SS. 316L (Prod. Code)	SPECIFICATION (Diameter / Length)
[Assign Code]	[Assign Code]	Standard Size
[Assign Code]	[Assign Code]	Medium Profile
[Assign Code]	[Assign Code]	Large Profile
[Assign Code]	[Assign Code]	Heavy-Duty Variant

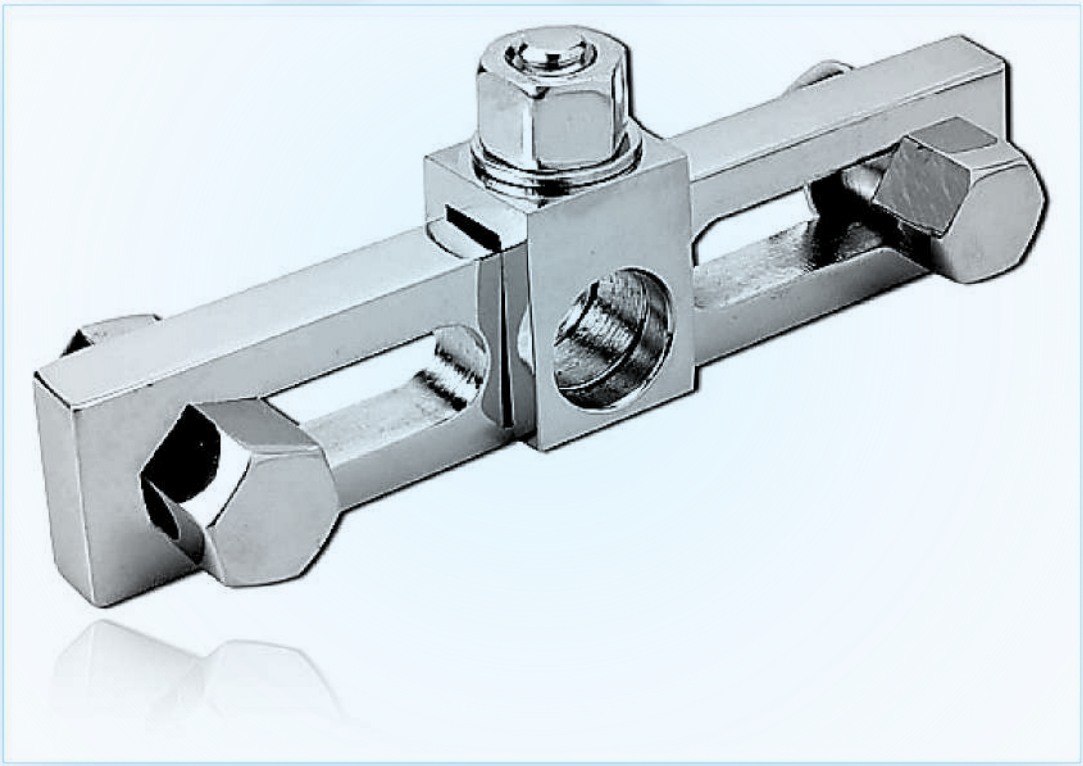

Universal Connecting Clamp (Large Tubular System)

011

Primary Use : Simplifies trauma tray inventory with versatile frame linkage.
Material : Stainless Steel 316L • **Spec:** Accepts Ø 11.0 mm rods & Ø 4.0 – 6.0 mm Schanz pins

TITANIUM / CARBON (Prod. Code)	SS. 316L (Prod. Code)	SPECIFICATION (Diameter / Length)
[Assign Code]	[Assign Code]	Standard Size
[Assign Code]	[Assign Code]	Medium Profile
[Assign Code]	[Assign Code]	Large Profile
[Assign Code]	[Assign Code]	Heavy-Duty Variant



Self-Adjustable Universal Clamp (Quick-Lock)

012

Primary Use : Prevents pin pre-bending stress during final frame tightening.
Material : SS 316L & Anodized Alloy • **Spec:** Accepts Ø 8.0 / 11.0 mm rods & Ø 4.0 – 6.0 mm pins

TITANIUM / CARBON (Prod. Code)	SS. 316L (Prod. Code)	SPECIFICATION (Diameter / Length)
[Assign Code]	[Assign Code]	Standard Size
[Assign Code]	[Assign Code]	Medium Profile
[Assign Code]	[Assign Code]	Large Profile
[Assign Code]	[Assign Code]	Heavy-Duty Variant



Rod-to-Pin Clamp — 8.0 mm Medium System (Aluminum)

013

Primary Use : Reduces frame weight on upper-extremity and pediatric trauma patients.
Material : Anodized Medical Aluminum / SS • **Spec:** Fits Ø 8.0 mm rod & Ø 3.5 – 5.0 mm Schanz pins

TITANIUM / CARBON (Prod. Code)	SS. 316L (Prod. Code)	SPECIFICATION (Diameter / Length)
[Assign Code]	[Assign Code]	Standard Size
[Assign Code]	[Assign Code]	Medium Profile
[Assign Code]	[Assign Code]	Large Profile
[Assign Code]	[Assign Code]	Heavy-Duty Variant



Rod-to-Pin Clamp — 8.0 mm Medium System (SS 316L)

014

Primary Use : Durable reusable clamp for distal tibia, humerus, and pediatric femur.
Material : Stainless Steel 316L • **Spec:** Fits Ø 8.0 mm rod & Ø 3.5 – 5.0 mm Schanz pins

TITANIUM / CARBON (Prod. Code)	SS. 316L (Prod. Code)	SPECIFICATION (Diameter / Length)
[Assign Code]	[Assign Code]	Standard Size
[Assign Code]	[Assign Code]	Medium Profile
[Assign Code]	[Assign Code]	Large Profile
[Assign Code]	[Assign Code]	Heavy-Duty Variant

IMAGE REQUIRED

Studio Mirror-Shine Photograph Pending • Product #014

Rod-to-Rod Clamp — 8.0 mm Medium System (Aluminum)

015

Primary Use : Enables rapid out-of-plane fracture reduction in medium long bones.
Material : Anodized Medical Aluminum • **Spec:** Couples two Ø 8.0 mm carbon or stainless rods

TITANIUM / CARBON (Prod. Code)	SS. 316L (Prod. Code)	SPECIFICATION (Diameter / Length)
[Assign Code]	[Assign Code]	Standard Size
[Assign Code]	[Assign Code]	Medium Profile
[Assign Code]	[Assign Code]	Large Profile
[Assign Code]	[Assign Code]	Heavy-Duty Variant

IMAGE REQUIRED

Studio Mirror-Shine Photograph Pending • Product #015

Rod-to-Rod Clamp — 8.0 mm Medium System (SS 316L)

016

Primary Use : Resists rotational slip under humeral and pediatric tibial loads.
Material : Stainless Steel 316L • **Spec:** Couples two Ø 8.0 mm rods; single-bolt lock

TITANIUM / CARBON (Prod. Code)	SS. 316L (Prod. Code)	SPECIFICATION (Diameter / Length)
[Assign Code]	[Assign Code]	Standard Size
[Assign Code]	[Assign Code]	Medium Profile
[Assign Code]	[Assign Code]	Large Profile
[Assign Code]	[Assign Code]	Heavy-Duty Variant

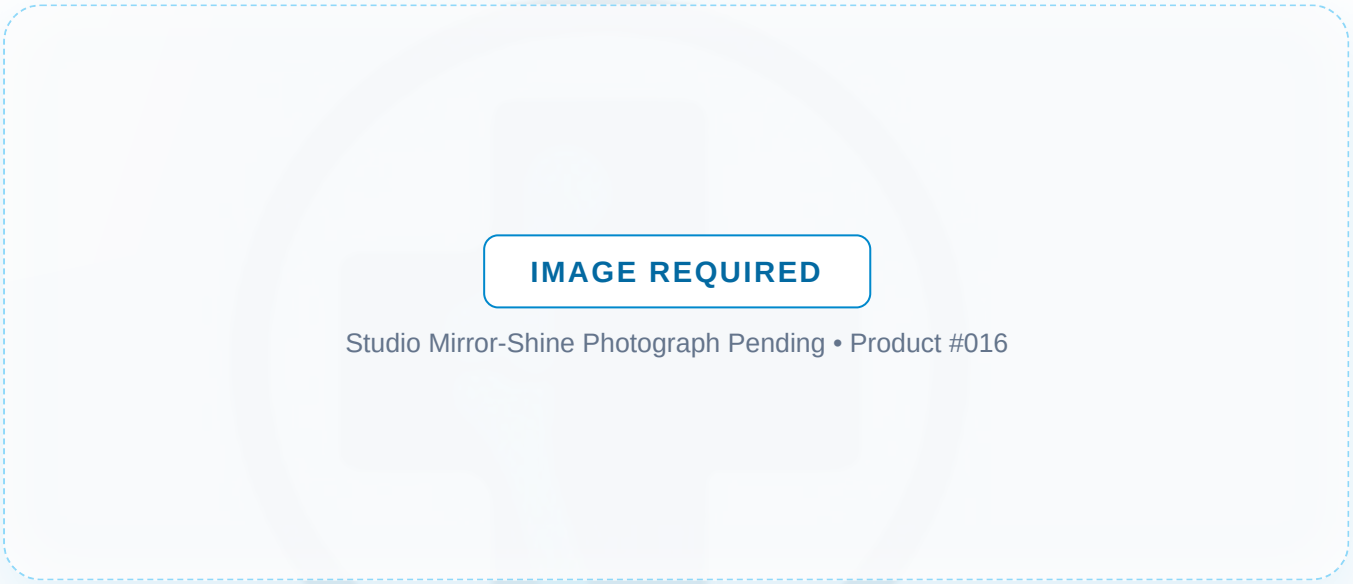

Carbon Fiber Connecting Rod — 4.0 mm Dia. (Small System)

017

Primary Use : Unobstructed AP/lateral radiographs of distal radius articular surface.
Material : Medical Carbon Fiber (Radiolucent) • **Spec:** Ø 4.0 mm; lengths 60, 80, 100, 120, 150, 200, 250 mm

TITANIUM / CARBON (Prod. Code)	SS. 316L (Prod. Code)	SPECIFICATION (Diameter / Length)
[Assign Code]	[Assign Code]	Standard Size
[Assign Code]	[Assign Code]	Medium Profile
[Assign Code]	[Assign Code]	Large Profile
[Assign Code]	[Assign Code]	Heavy-Duty Variant

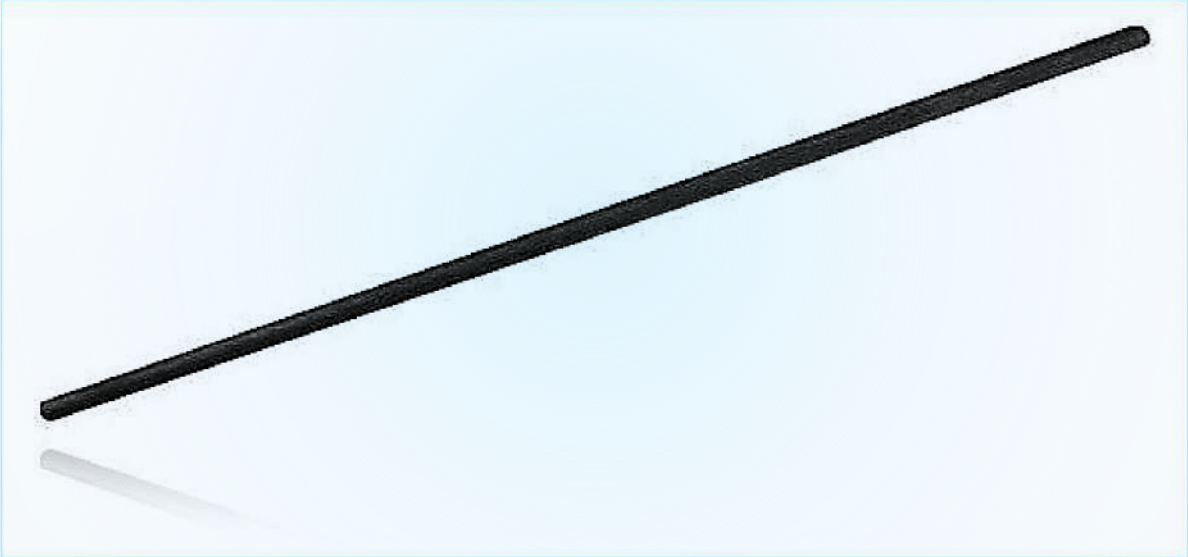

Stainless Steel Connecting Rod — 4.0 mm Dia. (Small System)

018

Primary Use : Provides rigid spanning across comminuted wrist and forearm fractures.
Material : Stainless Steel 316L • **Spec:** Ø 4.0 mm; lengths 60 – 250 mm

TITANIUM / CARBON (Prod. Code)	SS. 316L (Prod. Code)	SPECIFICATION (Diameter / Length)
[Assign Code]	[Assign Code]	Standard Size
[Assign Code]	[Assign Code]	Medium Profile
[Assign Code]	[Assign Code]	Large Profile
[Assign Code]	[Assign Code]	Heavy-Duty Variant

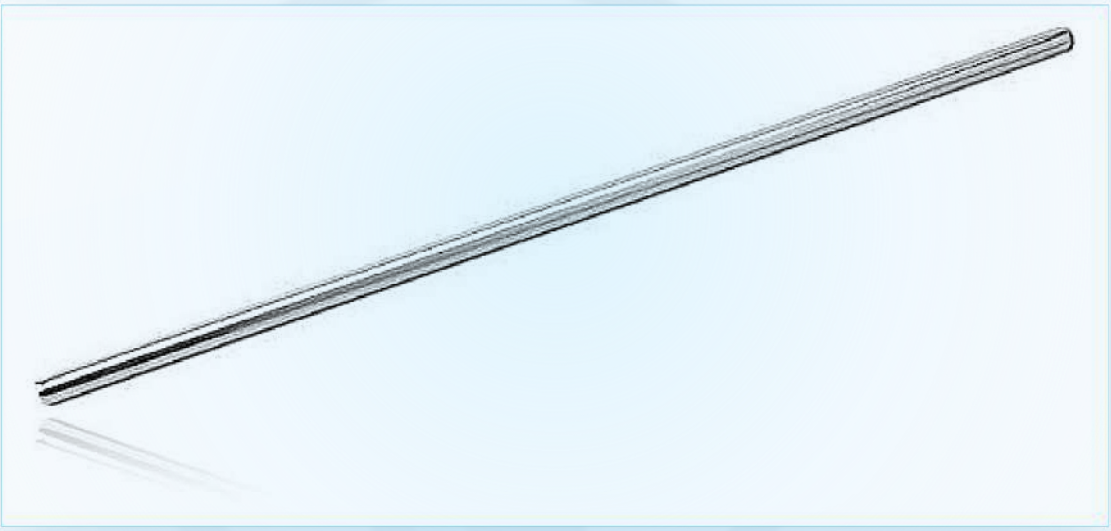

Connecting Rod — 5.0 mm Dia. × 200 mm (Medium-Small)

019

Primary Use : Ideal for adult forearm, ankle, and pediatric lower-limb frames.
Material : Stainless Steel 316L • **Spec:** Ø 5.0 mm; length 200 mm (custom 120 – 300 mm)

TITANIUM / CARBON (Prod. Code)	SS. 316L (Prod. Code)	SPECIFICATION (Diameter / Length)
[Assign Code]	[Assign Code]	Standard Size
[Assign Code]	[Assign Code]	Medium Profile
[Assign Code]	[Assign Code]	Large Profile
[Assign Code]	[Assign Code]	Heavy-Duty Variant

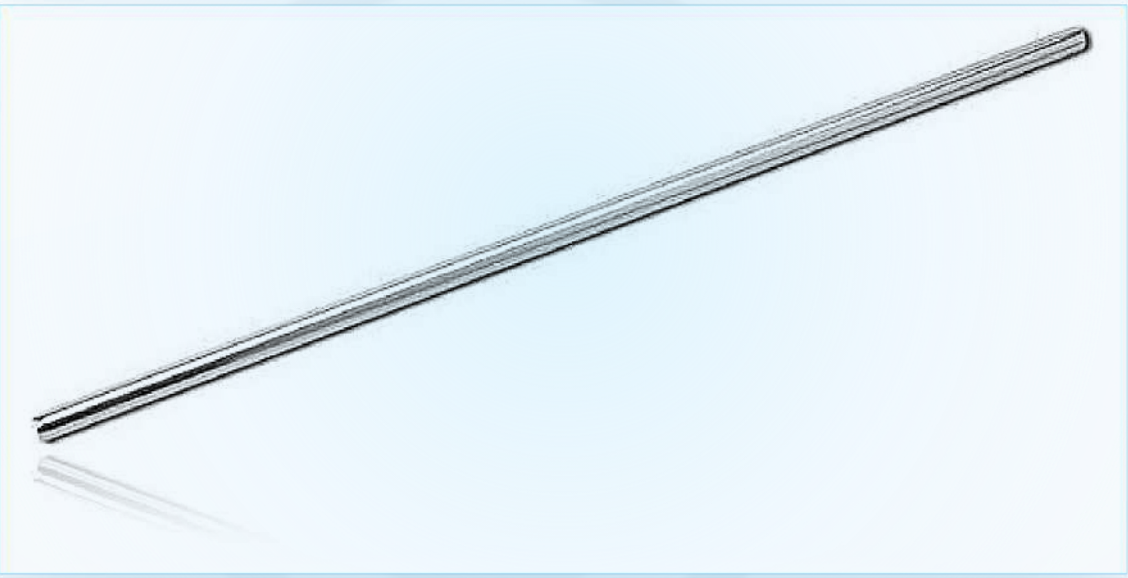

Small Single-Pin Clamp (4.0 mm Rod × 2.5 mm Pin)

020

Primary Use : Workhorse clamp for distal radius and metacarpal external fixation.
Material : Stainless Steel 316L • **Spec:** Fits Ø 4.0 mm rod & Ø 2.0 – 2.5 mm Schanz pins

TITANIUM / CARBON (Prod. Code)	SS. 316L (Prod. Code)	SPECIFICATION (Diameter / Length)
[Assign Code]	[Assign Code]	Standard Size
[Assign Code]	[Assign Code]	Medium Profile
[Assign Code]	[Assign Code]	Large Profile
[Assign Code]	[Assign Code]	Heavy-Duty Variant

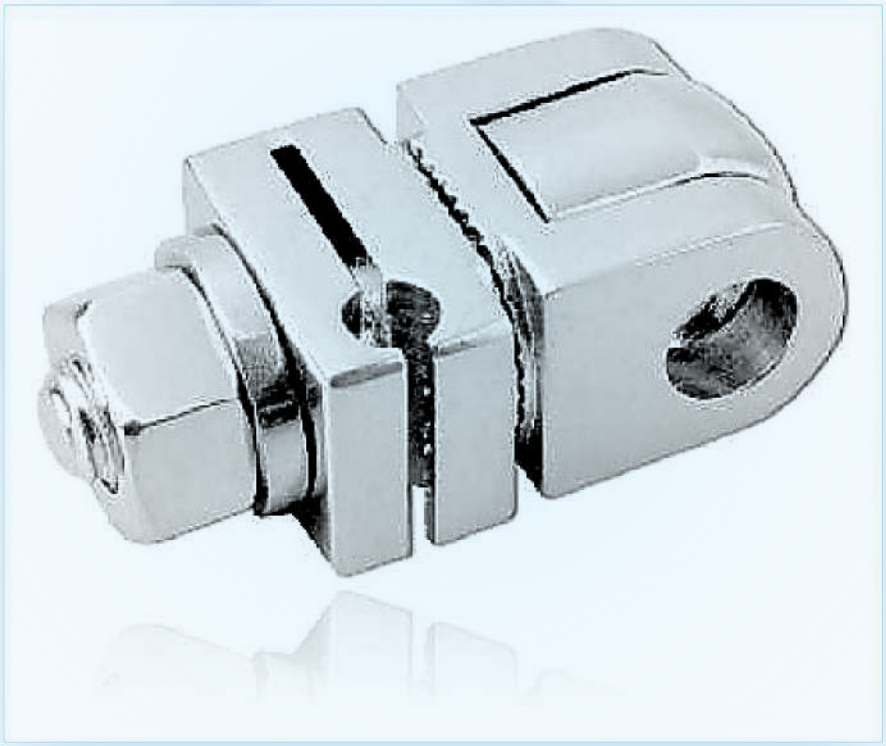

Open Small Single-Pin Clamp (4.0 mm × 2.5 mm, Snap-On)

021

Primary Use : Allows effortless addition of supplementary radial/metacarpal pins.
Material : Stainless Steel 316L • **Spec:** Fits Ø 4.0 mm rod & Ø 2.0 – 2.5 mm Schanz pins

TITANIUM / CARBON (Prod. Code)	SS. 316L (Prod. Code)	SPECIFICATION (Diameter / Length)
[Assign Code]	[Assign Code]	Standard Size
[Assign Code]	[Assign Code]	Medium Profile
[Assign Code]	[Assign Code]	Large Profile
[Assign Code]	[Assign Code]	Heavy-Duty Variant

IMAGE REQUIRED

Studio Mirror-Shine Photograph Pending • Product #021

Small Rod-to-Rod Connection Clamp (4.0 mm × 4.0 mm)

022

Primary Use : Enables modular two-bar reduction for intra-articular wrist fractures.
Material : Stainless Steel 316L • **Spec:** Couples two Ø 4.0 mm rods at any spatial angle

TITANIUM / CARBON (Prod. Code)	SS. 316L (Prod. Code)	SPECIFICATION (Diameter / Length)
[Assign Code]	[Assign Code]	Standard Size
[Assign Code]	[Assign Code]	Medium Profile
[Assign Code]	[Assign Code]	Large Profile
[Assign Code]	[Assign Code]	Heavy-Duty Variant

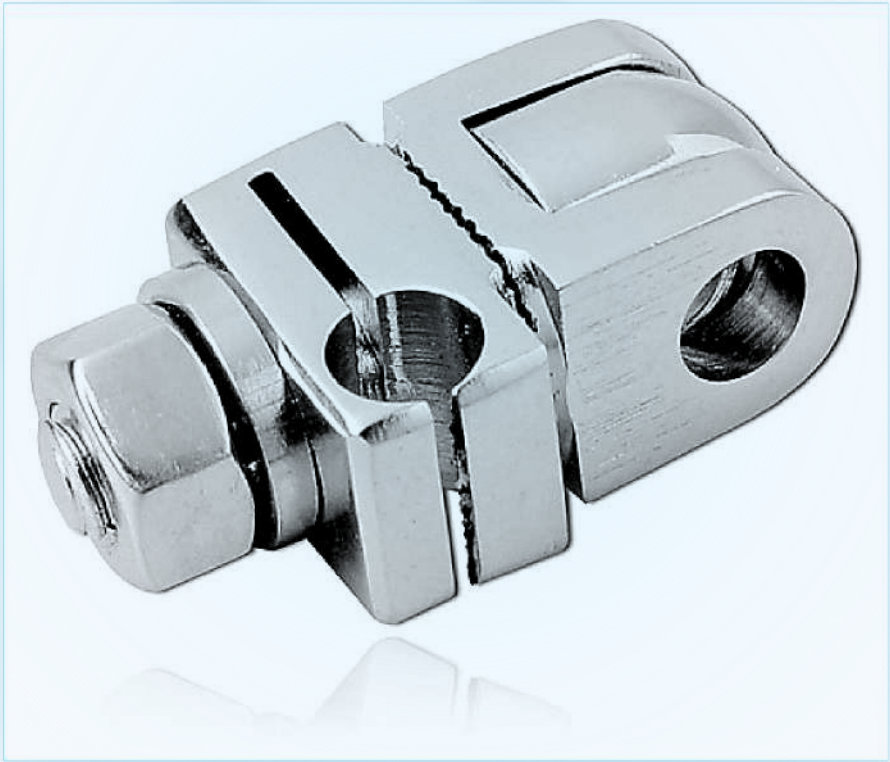

Open Small Rod-to-Rod Clamp (4.0 mm × 4.0 mm)

023

Primary Use : Simplifies adding a second stabilizing bar after primary reduction.
Material : Stainless Steel 316L • **Spec:** Open-jaw coupling for two Ø 4.0 mm bars

TITANIUM / CARBON (Prod. Code)	SS. 316L (Prod. Code)	SPECIFICATION (Diameter / Length)
[Assign Code]	[Assign Code]	Standard Size
[Assign Code]	[Assign Code]	Medium Profile
[Assign Code]	[Assign Code]	Large Profile
[Assign Code]	[Assign Code]	Heavy-Duty Variant

IMAGE REQUIRED

Studio Mirror-Shine Photograph Pending • Product #023

Forearm Mini Single-Pin Clamp (4.0 mm × 2.5 mm)

024

Primary Use : Low-profile clamping geometry minimizes forearm tendon impingement.
Material : Stainless Steel 316L • **Spec:** Fits Ø 4.0 mm rod & Ø 2.5 – 3.0 mm forearm pins

TITANIUM / CARBON (Prod. Code)	SS. 316L (Prod. Code)	SPECIFICATION (Diameter / Length)
[Assign Code]	[Assign Code]	Standard Size
[Assign Code]	[Assign Code]	Medium Profile
[Assign Code]	[Assign Code]	Large Profile
[Assign Code]	[Assign Code]	Heavy-Duty Variant

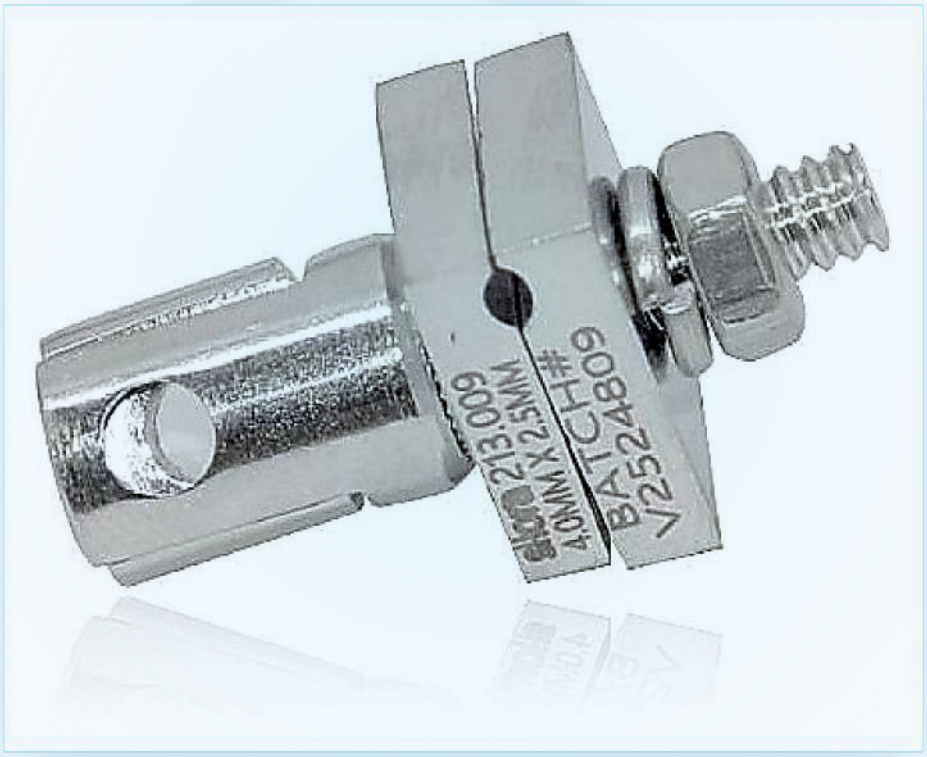

Forearm Mini Connecting Pin Clamp (4.0 mm × 4.0 mm)

025

Primary Use : Maintains forearm pronation-supination alignment during healing.
Material : Stainless Steel 316L • **Spec:** Connects Ø 4.0 mm forearm bars & auxiliary pin struts

TITANIUM / CARBON (Prod. Code)	SS. 316L (Prod. Code)	SPECIFICATION (Diameter / Length)
[Assign Code]	[Assign Code]	Standard Size
[Assign Code]	[Assign Code]	Medium Profile
[Assign Code]	[Assign Code]	Large Profile
[Assign Code]	[Assign Code]	Heavy-Duty Variant

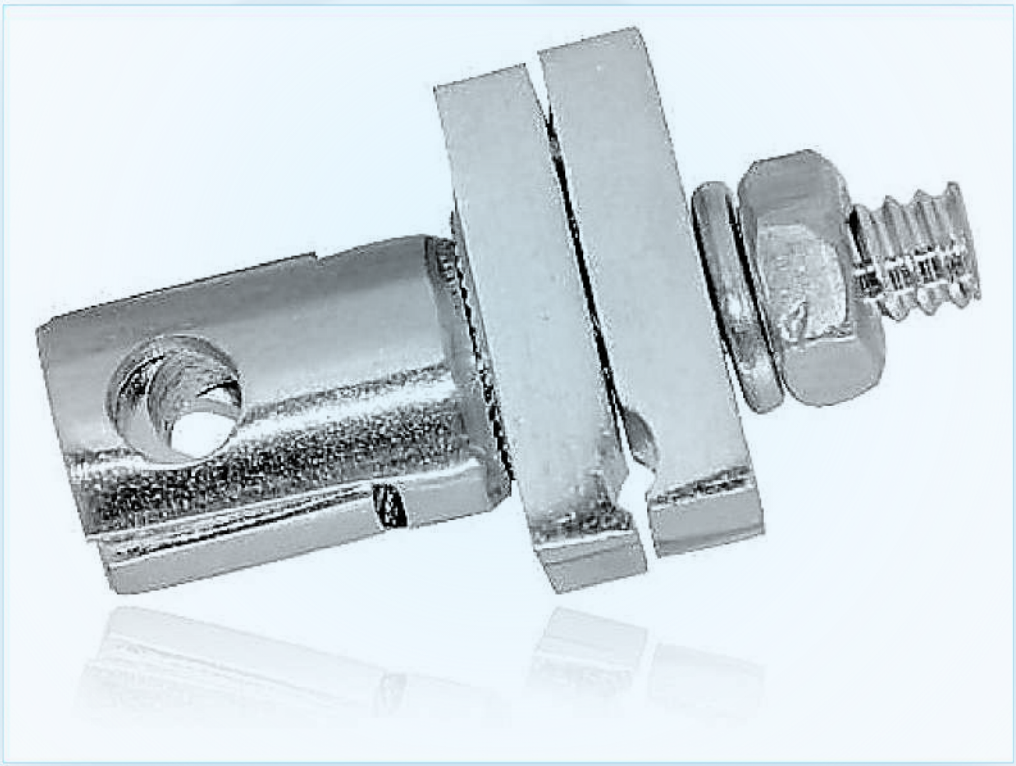

Rod-to-Pin Clamp — 4.0 mm System (Anodized Aluminum)

026

Primary Use : Color-anodized finish for quick OR identification.
Material : Anodized Medical Aluminum • **Spec:** Fits Ø 4.0 mm rod & Ø 2.0 – 3.0 mm pins

TITANIUM / CARBON (Prod. Code)	SS. 316L (Prod. Code)	SPECIFICATION (Diameter / Length)
[Assign Code]	[Assign Code]	Standard Size
[Assign Code]	[Assign Code]	Medium Profile
[Assign Code]	[Assign Code]	Large Profile
[Assign Code]	[Assign Code]	Heavy-Duty Variant

IMAGE REQUIRED

Studio Mirror-Shine Photograph Pending • Product #026

Rod-to-Pin Clamp — 4.0 mm System (Stainless Steel 316L)

027

Primary Use : Long service life across repeated hospital sterilization cycles.
Material : Stainless Steel 316L • **Spec:** Fits Ø 4.0 mm rod & Ø 2.0 – 3.0 mm pins

TITANIUM / CARBON (Prod. Code)	SS. 316L (Prod. Code)	SPECIFICATION (Diameter / Length)
[Assign Code]	[Assign Code]	Standard Size
[Assign Code]	[Assign Code]	Medium Profile
[Assign Code]	[Assign Code]	Large Profile
[Assign Code]	[Assign Code]	Heavy-Duty Variant

IMAGE REQUIRED

Studio Mirror-Shine Photograph Pending • Product #027

Rod-to-Rod Clamp — 4.0 mm System (Anodized Aluminum)

028

Primary Use : Ideal for radiolucent wrist, hand, and forefoot constructs.
Material : Anodized Medical Aluminum • **Spec:** Couples two Ø 4.0 mm carbon or stainless rods

TITANIUM / CARBON (Prod. Code)	SS. 316L (Prod. Code)	SPECIFICATION (Diameter / Length)
[Assign Code]	[Assign Code]	Standard Size
[Assign Code]	[Assign Code]	Medium Profile
[Assign Code]	[Assign Code]	Large Profile
[Assign Code]	[Assign Code]	Heavy-Duty Variant

IMAGE REQUIRED

Studio Mirror-Shine Photograph Pending • Product #028

Rod-to-Rod Clamp — 4.0 mm System (Stainless Steel 316L)

029

Primary Use : Eliminates construct slip in high-tension ligamentotaxis.
Material : Stainless Steel 316L • **Spec:** Couples two Ø 4.0 mm rods

TITANIUM / CARBON (Prod. Code)	SS. 316L (Prod. Code)	SPECIFICATION (Diameter / Length)
[Assign Code]	[Assign Code]	Standard Size
[Assign Code]	[Assign Code]	Medium Profile
[Assign Code]	[Assign Code]	Large Profile
[Assign Code]	[Assign Code]	Heavy-Duty Variant

IMAGE REQUIRED

Studio Mirror-Shine Photograph Pending • Product #029

Round Clamps Large & Small External Fixator System

030

Primary Use : Versatile trauma kit for rapid hospital emergency deployment.
Material : SS 316L & Anodized Aluminum • **Spec:** Complete large (11 mm) & small (4 mm) round-clamp modular kit

TITANIUM / CARBON (Prod. Code)	SS. 316L (Prod. Code)	SPECIFICATION (Diameter / Length)
[Assign Code]	[Assign Code]	Standard Size
[Assign Code]	[Assign Code]	Medium Profile
[Assign Code]	[Assign Code]	Large Profile
[Assign Code]	[Assign Code]	Heavy-Duty Variant



LRS Monolateral Rail Body (120 mm – 400 mm Lengths)

031

Primary Use : Core structural beam for adult and pediatric limb reconstruction.
Material : Aerospace Aluminum Alloy / SS • **Spec:** Lengths 120, 200, 250, 300, 350, 400 mm; anodized alloy rail

TITANIUM / CARBON (Prod. Code)	SS. 316L (Prod. Code)	SPECIFICATION (Diameter / Length)
[Assign Code]	[Assign Code]	Standard Size
[Assign Code]	[Assign Code]	Medium Profile
[Assign Code]	[Assign Code]	Large Profile
[Assign Code]	[Assign Code]	Heavy-Duty Variant

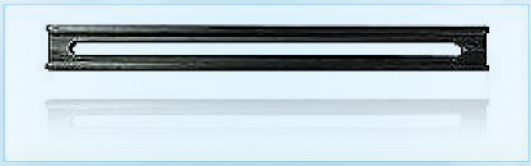

LRS Mono-Rail Complete Graphic Implant & Fixator Set

032

Primary Use : Covers femur, tibia, and humerus lengthening and defect transport.
Material : Anodized Aluminum & SS 316L • **Spec:** Complete multi-length LRS rails, clamps, CD units & templates

TITANIUM / CARBON (Prod. Code)	SS. 316L (Prod. Code)	SPECIFICATION (Diameter / Length)
[Assign Code]	[Assign Code]	Standard Size
[Assign Code]	[Assign Code]	Medium Profile
[Assign Code]	[Assign Code]	Large Profile
[Assign Code]	[Assign Code]	Heavy-Duty Variant



LRS End Clamp (Standard 5-Seat Pin Block)

033

Primary Use : Anchors proximal or distal bone segment rigidly to LRS rail.
Material : Anodized Aluminum / SS Inserts • **Spec:** Accepts up to 5 tapered 6.0→5.0 mm Schanz pins; locks on LRS rail

TITANIUM / CARBON (Prod. Code)	SS. 316L (Prod. Code)	SPECIFICATION (Diameter / Length)
[Assign Code]	[Assign Code]	Standard Size
[Assign Code]	[Assign Code]	Medium Profile
[Assign Code]	[Assign Code]	Large Profile
[Assign Code]	[Assign Code]	Heavy-Duty Variant

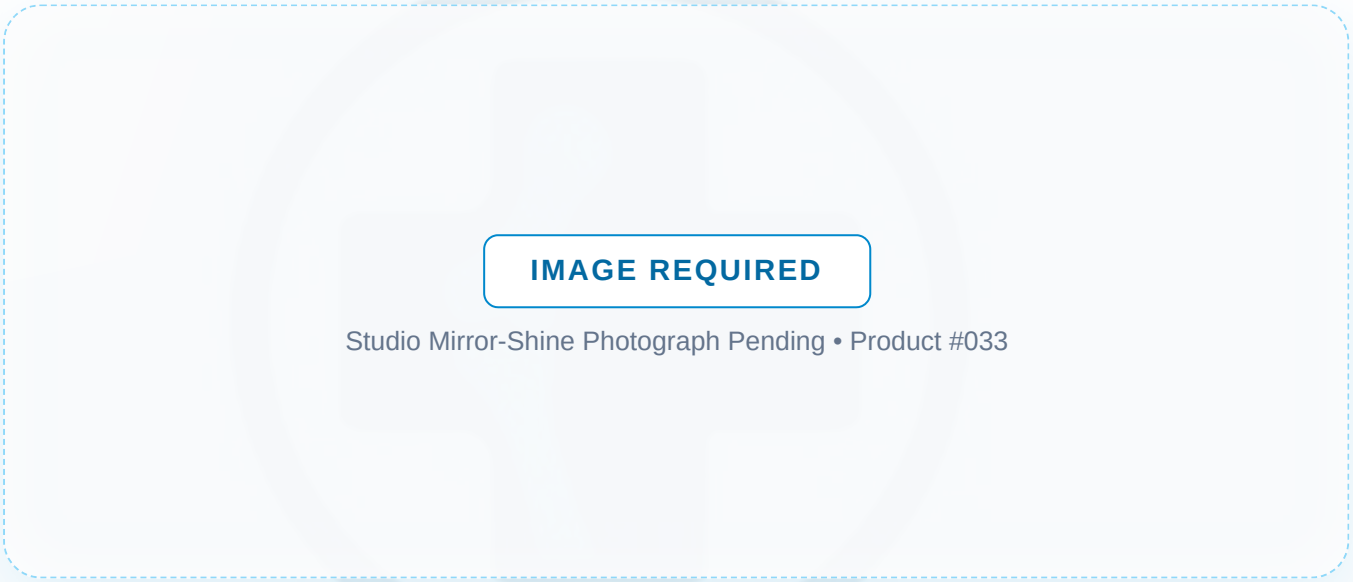

LRS Central Clamp (Sliding Bone-Transport Block)

034

Primary Use : Moves intermediate intercalary bone segment cleanly across defects.
Material : Anodized Aluminum / SS Inserts • **Spec:** Accepts 2–5 tapered pins; slides smoothly along LRS rail

TITANIUM / CARBON (Prod. Code)	SS. 316L (Prod. Code)	SPECIFICATION (Diameter / Length)
[Assign Code]	[Assign Code]	Standard Size
[Assign Code]	[Assign Code]	Medium Profile
[Assign Code]	[Assign Code]	Large Profile
[Assign Code]	[Assign Code]	Heavy-Duty Variant

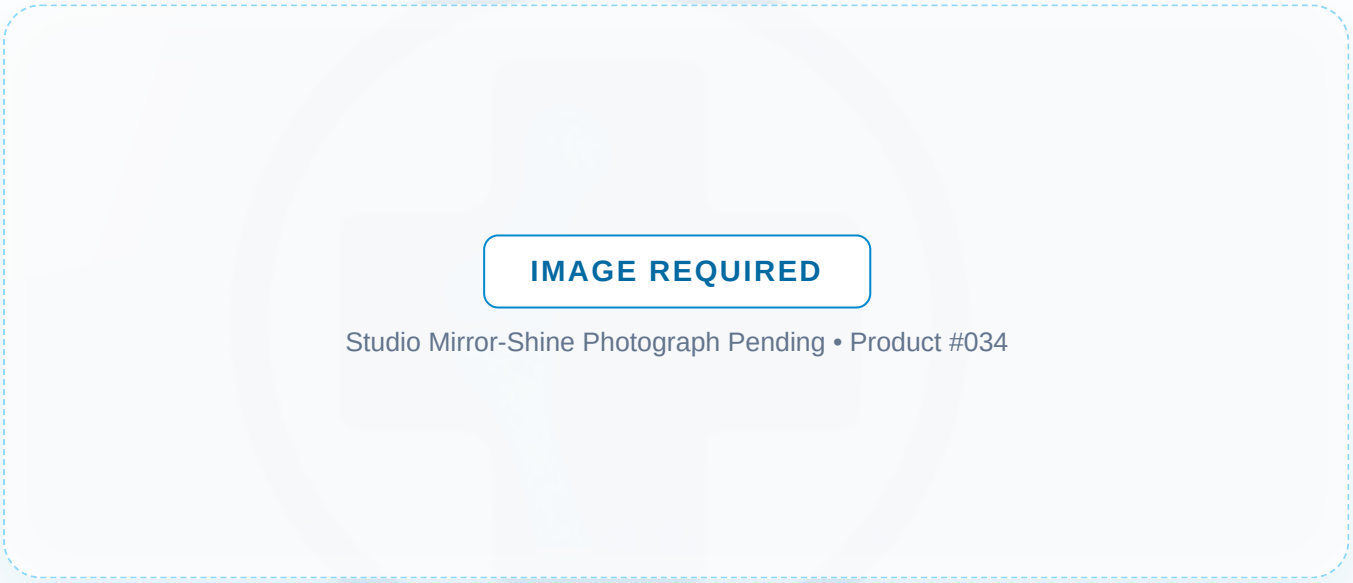

LRS T-Clamp (Metaphyseal / Periarticular Pin Block)

035

Primary Use : Prevents joint-spanning when treating high metaphyseal fractures.
Material : Anodized Aluminum / SS 316L • **Spec:** Transverse T-seat accepts 3–5 parallel metaphyseal pins

TITANIUM / CARBON (Prod. Code)	SS. 316L (Prod. Code)	SPECIFICATION (Diameter / Length)
[Assign Code]	[Assign Code]	Standard Size
[Assign Code]	[Assign Code]	Medium Profile
[Assign Code]	[Assign Code]	Large Profile
[Assign Code]	[Assign Code]	Heavy-Duty Variant

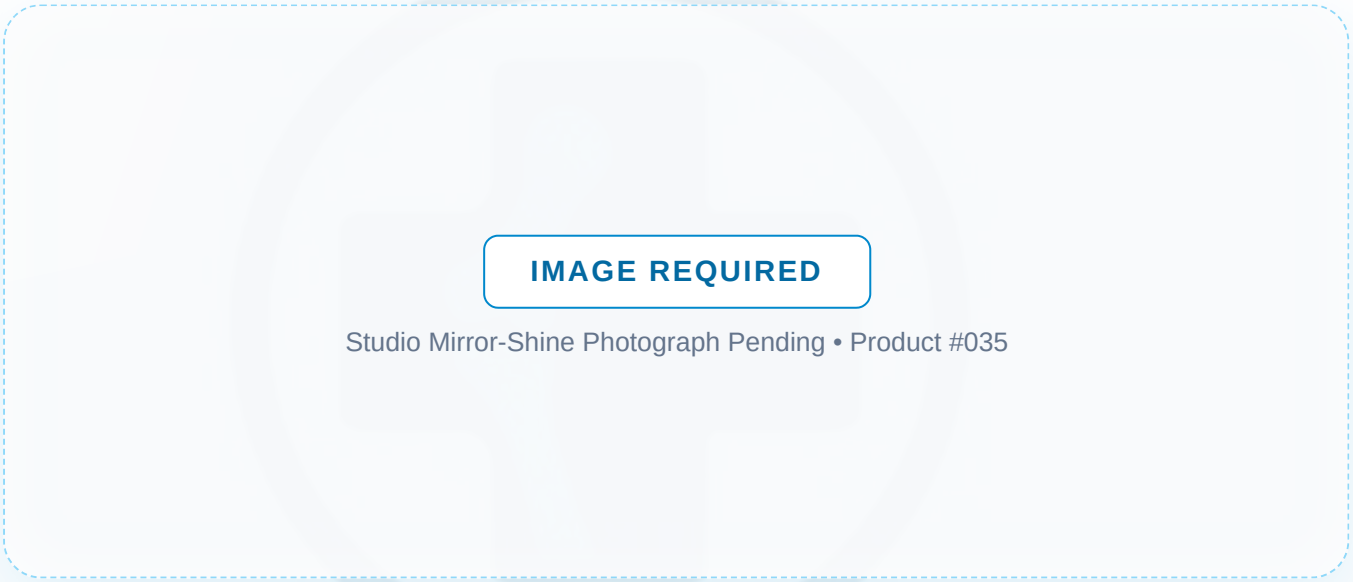

LRS Swivel Clamp (Angular Deformity Correction)

036

Primary Use : Allows progressive or acute angular deformity realignment on rail.
Material : Anodized Aluminum / SS 316L • **Spec:** ±30° angular swivel; accepts 3–5 tapered cortical pins

TITANIUM / CARBON (Prod. Code)	SS. 316L (Prod. Code)	SPECIFICATION (Diameter / Length)
[Assign Code]	[Assign Code]	Standard Size
[Assign Code]	[Assign Code]	Medium Profile
[Assign Code]	[Assign Code]	Large Profile
[Assign Code]	[Assign Code]	Heavy-Duty Variant



LRS Graduated Swivel Clamp (Calibrated Angle Scale)

037

Primary Use : Ideal for high tibial osteotomy and complex malunion correction.
Material : Anodized Aluminum / SS 316L • **Spec:** Laser-graduated angular scale; precision worm-drive lock

TITANIUM / CARBON (Prod. Code)	SS. 316L (Prod. Code)	SPECIFICATION (Diameter / Length)
[Assign Code]	[Assign Code]	Standard Size
[Assign Code]	[Assign Code]	Medium Profile
[Assign Code]	[Assign Code]	Large Profile
[Assign Code]	[Assign Code]	Heavy-Duty Variant



LRS Dyna-Clamp (Controlled Axial Dynamization Block)

038

Primary Use : Stimulates fracture callus maturation and prevents stress shielding.
Material : Anodized Aluminum / SS 316L • **Spec:** Built-in silicone/spring axial micromotion damper

TITANIUM / CARBON (Prod. Code)	SS. 316L (Prod. Code)	SPECIFICATION (Diameter / Length)
[Assign Code]	[Assign Code]	Standard Size
[Assign Code]	[Assign Code]	Medium Profile
[Assign Code]	[Assign Code]	Large Profile
[Assign Code]	[Assign Code]	Heavy-Duty Variant



LRS Sandwich Clamp (Dual-Level Offset Pin Block)

039

Primary Use : Solves multi-planar pin placement around deformed or scarred limbs.
Material : Anodized Aluminum / SS 316L • **Spec:** Dual-tier offset pin seats; clamps directly onto LRS rail

TITANIUM / CARBON (Prod. Code)	SS. 316L (Prod. Code)	SPECIFICATION (Diameter / Length)
[Assign Code]	[Assign Code]	Standard Size
[Assign Code]	[Assign Code]	Medium Profile
[Assign Code]	[Assign Code]	Large Profile
[Assign Code]	[Assign Code]	Heavy-Duty Variant

IMAGE REQUIRED

Studio Mirror-Shine Photograph Pending • Product #039

Compression-Distraction (CD) Unit — Large LRS

040

Primary Use : Delivers exact 0.25 mm quarter-turn daily distraction osteogenesis.
Material : Stainless Steel 316L • **Spec:** Stroke 50 – 150 mm; 1 full turn = 1.0 mm distraction/compression

TITANIUM / CARBON (Prod. Code)	SS. 316L (Prod. Code)	SPECIFICATION (Diameter / Length)
[Assign Code]	[Assign Code]	Standard Size
[Assign Code]	[Assign Code]	Medium Profile
[Assign Code]	[Assign Code]	Large Profile
[Assign Code]	[Assign Code]	Heavy-Duty Variant

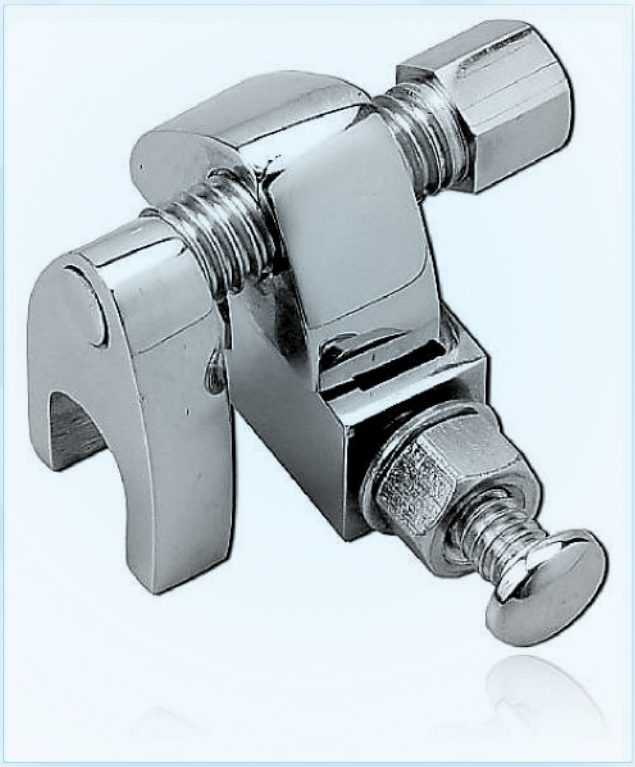

Small Compression-Distraction (CD) Unit (Pediatric / Forearm)

041

Primary Use : Enables precise lengthening of forearm, humerus, and pediatric tibia.
Material : Stainless Steel 316L • **Spec:** Stroke 30 – 80 mm; 1 turn = 0.5 / 1.0 mm

TITANIUM / CARBON (Prod. Code)	SS. 316L (Prod. Code)	SPECIFICATION (Diameter / Length)
[Assign Code]	[Assign Code]	Standard Size
[Assign Code]	[Assign Code]	Medium Profile
[Assign Code]	[Assign Code]	Large Profile
[Assign Code]	[Assign Code]	Heavy-Duty Variant

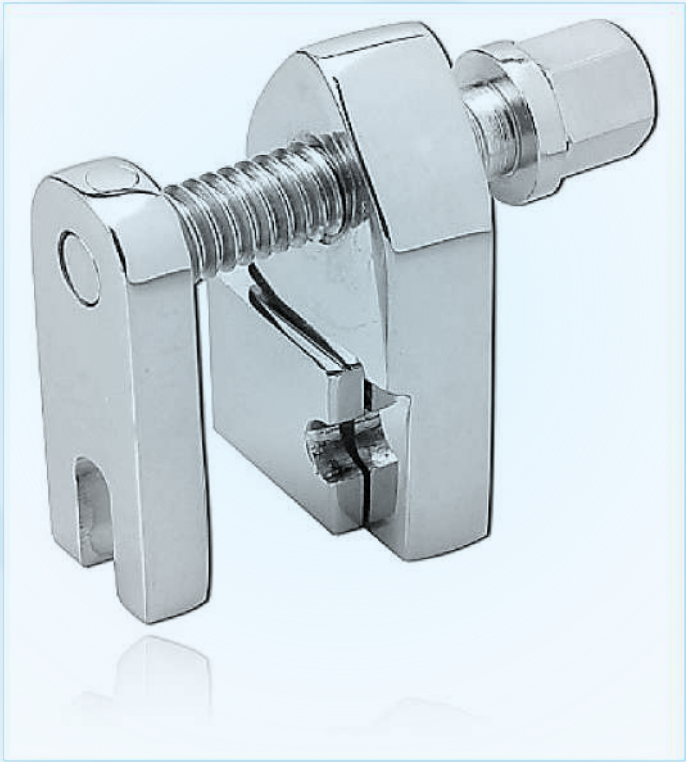

Template for LRS End & Central Clamp (Pin-Drilling Guide)

042

Primary Use : Eliminates pin-clamp binding and accelerates OR setup time.
Material : Stainless Steel 316L • **Spec:** Matches exact 5-hole pin spacing of LRS End & Central clamps

TITANIUM / CARBON (Prod. Code)	SS. 316L (Prod. Code)	SPECIFICATION (Diameter / Length)
[Assign Code]	[Assign Code]	Standard Size
[Assign Code]	[Assign Code]	Medium Profile
[Assign Code]	[Assign Code]	Large Profile
[Assign Code]	[Assign Code]	Heavy-Duty Variant

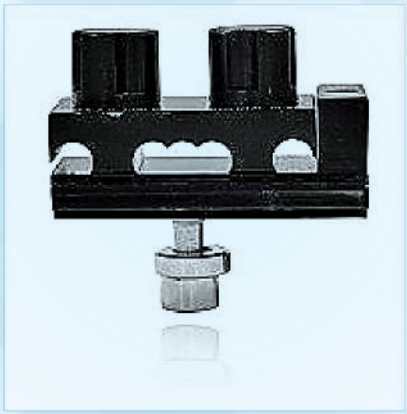

Template for LRS Swivel Clamp (Pin-Drilling Guide)

043

Primary Use : Ensures stress-free clamp seating on osteotomized bone.
Material : Stainless Steel 316L • **Spec:** Matches angled pin trajectory of LRS Swivel Clamp

TITANIUM / CARBON (Prod. Code)	SS. 316L (Prod. Code)	SPECIFICATION (Diameter / Length)
[Assign Code]	[Assign Code]	Standard Size
[Assign Code]	[Assign Code]	Medium Profile
[Assign Code]	[Assign Code]	Large Profile
[Assign Code]	[Assign Code]	Heavy-Duty Variant

IMAGE REQUIRED

Studio Mirror-Shine Photograph Pending • Product #043

Mini Hand Rail External Fixator (Metacarpal / Phalanx)

044

Primary Use : Treats phalangeal/metacarpal shortening, nonunion, and contractures.
Material : Anodized Aluminum / SS 316L • **Spec:** Compact micro-rail; accepts Ø 1.5 – 2.0 mm mini Schanz pins

TITANIUM / CARBON (Prod. Code)	SS. 316L (Prod. Code)	SPECIFICATION (Diameter / Length)
[Assign Code]	[Assign Code]	Standard Size
[Assign Code]	[Assign Code]	Medium Profile
[Assign Code]	[Assign Code]	Large Profile
[Assign Code]	[Assign Code]	Heavy-Duty Variant



Mini Rail Finger Fixator — Horizontal Orientation

045

Primary Use : Maintains PIP/MCP joint distraction with early active motion.
Material : Anodized Aluminum / SS 316L • **Spec:** Horizontal pin-plane micro-rail; accepts Ø 1.5 mm pins

TITANIUM / CARBON (Prod. Code)	SS. 316L (Prod. Code)	SPECIFICATION (Diameter / Length)
[Assign Code]	[Assign Code]	Standard Size
[Assign Code]	[Assign Code]	Medium Profile
[Assign Code]	[Assign Code]	Large Profile
[Assign Code]	[Assign Code]	Heavy-Duty Variant

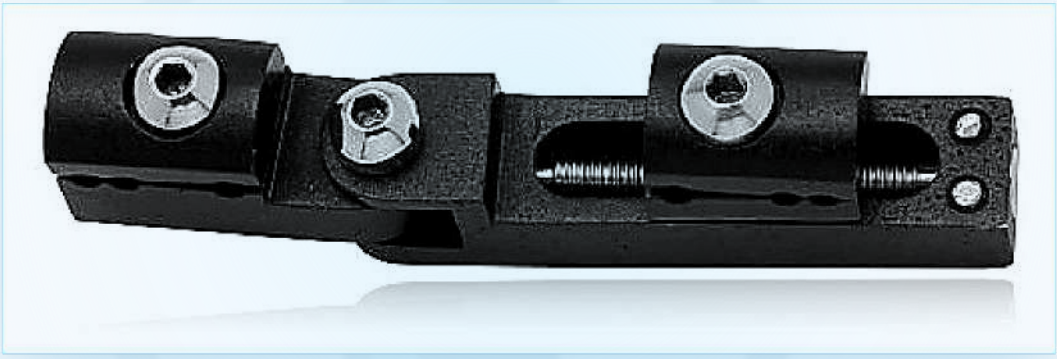

Mini Rail Finger Fixator — Vertical Orientation

046

Primary Use : Enables controlled ligamentotaxis and progressive joint mobilization.
Material : Anodized Aluminum / SS 316L • **Spec:** Vertical pin-plane micro-rail; accepts Ø 1.5 mm pins

TITANIUM / CARBON (Prod. Code)	SS. 316L (Prod. Code)	SPECIFICATION (Diameter / Length)
[Assign Code]	[Assign Code]	Standard Size
[Assign Code]	[Assign Code]	Medium Profile
[Assign Code]	[Assign Code]	Large Profile
[Assign Code]	[Assign Code]	Heavy-Duty Variant

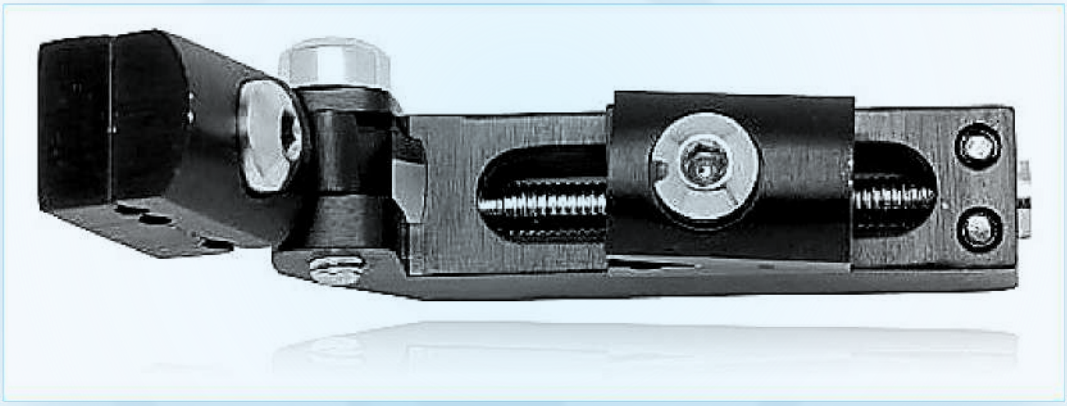

Lengthening Fixator — Small (Pediatric / Forearm)

047

Primary Use : Compact distraction/compression fixator for forearm & pediatric bone.
Material : SS 316L / Anodized Aluminum • **Spec:** Stroke 40 mm; accepts Ø 3.0–4.0 mm pins

TITANIUM / CARBON (Prod. Code)	SS. 316L (Prod. Code)	SPECIFICATION (Diameter / Length)
[Assign Code]	[Assign Code]	Standard Size
[Assign Code]	[Assign Code]	Medium Profile
[Assign Code]	[Assign Code]	Large Profile
[Assign Code]	[Assign Code]	Heavy-Duty Variant

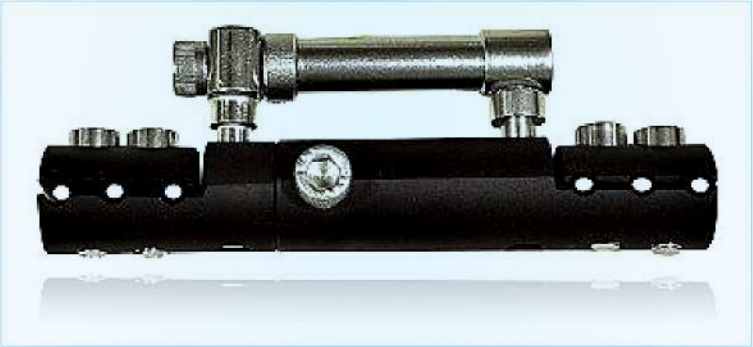

Lengthening Fixator — Medium (Tibia / Humerus)

048

Primary Use : Modular monolateral lengthening fixator for adult humerus & tibia.
Material : SS 316L / Anodized Aluminum • **Spec:** Stroke 60 mm; accepts Ø 4.0–5.0 mm pins

TITANIUM / CARBON (Prod. Code)	SS. 316L (Prod. Code)	SPECIFICATION (Diameter / Length)
[Assign Code]	[Assign Code]	Standard Size
[Assign Code]	[Assign Code]	Medium Profile
[Assign Code]	[Assign Code]	Large Profile
[Assign Code]	[Assign Code]	Heavy-Duty Variant

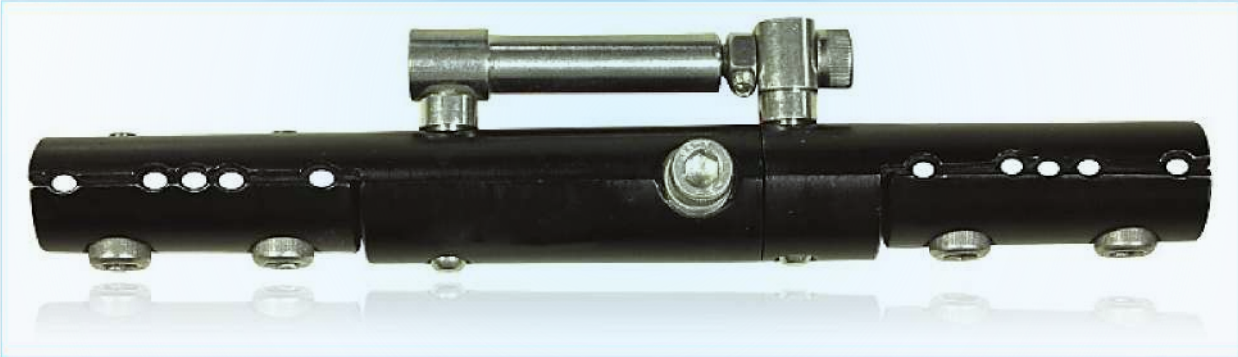

Dynamic External Fixator with Ball & Socket Joint — Large (Femur/Tibia)

049

Primary Use : Permits multi-planar closed reduction and late weight-bearing dynamization.
Material : Anodized Aluminum & SS 316L • **Spec:** Telescoping body 240–340 mm; accepts Ø 5.0–6.0 mm tapered pins

TITANIUM / CARBON (Prod. Code)	SS. 316L (Prod. Code)	SPECIFICATION (Diameter / Length)
[Assign Code]	[Assign Code]	Standard Size
[Assign Code]	[Assign Code]	Medium Profile
[Assign Code]	[Assign Code]	Large Profile
[Assign Code]	[Assign Code]	Heavy-Duty Variant



Dynamic External Fixator with Ball & Socket Joint — Medium (Tibia/Humerus)

050

Primary Use : Ideal for adult humeral, pediatric femoral, and distal tibial trauma.
Material : Anodized Aluminum & SS 316L • **Spec:** Telescoping body 180–260 mm; accepts Ø 4.0–5.0 mm pins

TITANIUM / CARBON (Prod. Code)	SS. 316L (Prod. Code)	SPECIFICATION (Diameter / Length)
[Assign Code]	[Assign Code]	Standard Size
[Assign Code]	[Assign Code]	Medium Profile
[Assign Code]	[Assign Code]	Large Profile
[Assign Code]	[Assign Code]	Heavy-Duty Variant



Dynamic External Fixator with Ball & Socket Joint — Small (Forearm/Pediatric)

051

Primary Use : Allows easy outpatient alignment touch-ups without anesthesia.
Material : Anodized Aluminum & SS 316L • **Spec:** Telescoping body 130–190 mm; accepts Ø 3.0–4.0 mm pins

TITANIUM / CARBON (Prod. Code)	SS. 316L (Prod. Code)	SPECIFICATION (Diameter / Length)
[Assign Code]	[Assign Code]	Standard Size
[Assign Code]	[Assign Code]	Medium Profile
[Assign Code]	[Assign Code]	Large Profile
[Assign Code]	[Assign Code]	Heavy-Duty Variant



Dynamic Ball-Socket External Fixator for Wrist & Forearm

052

Primary Use : Gold-standard ligamentotaxis for comminuted intra-articular distal radius.
Material : Anodized Aluminum & SS 316L • **Spec:** Low-profile wrist spanning body; accepts Ø 2.5–3.0 mm wrist pins

TITANIUM / CARBON (Prod. Code)	SS. 316L (Prod. Code)	SPECIFICATION (Diameter / Length)
[Assign Code]	[Assign Code]	Standard Size
[Assign Code]	[Assign Code]	Medium Profile
[Assign Code]	[Assign Code]	Large Profile
[Assign Code]	[Assign Code]	Heavy-Duty Variant

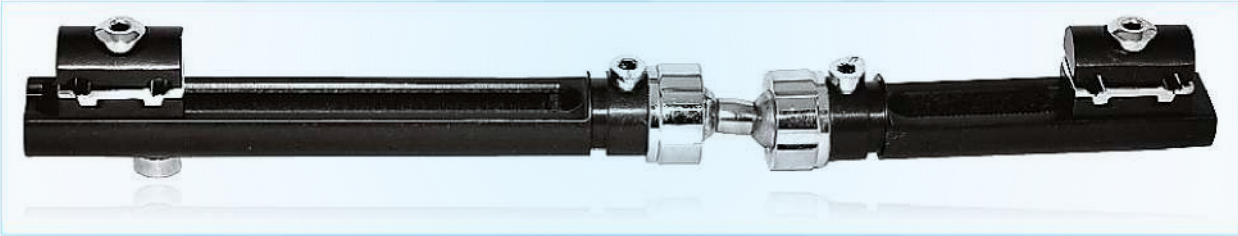

Wrist & Hand External Fixator Complete Set

053

Primary Use : Ready for emergency distal radius and perilunate dislocation stabilization.
Material : SS 316L & Anodized Aluminum • **Spec:** Spanning wrist fixator body + wrist pins + drill sleeves + wrenches

TITANIUM / CARBON (Prod. Code)	SS. 316L (Prod. Code)	SPECIFICATION (Diameter / Length)
[Assign Code]	[Assign Code]	Standard Size
[Assign Code]	[Assign Code]	Medium Profile
[Assign Code]	[Assign Code]	Large Profile
[Assign Code]	[Assign Code]	Heavy-Duty Variant

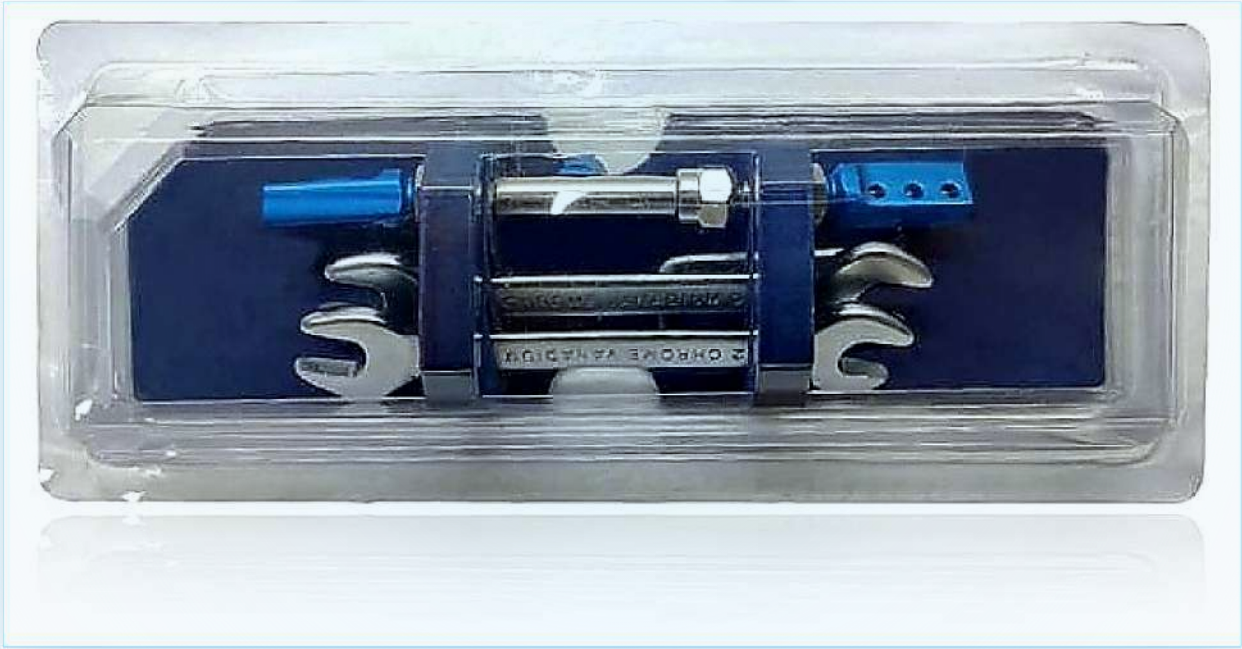

Colles / Distal Radius Dynamic Bridging Fixator (Gamma Sterile)

054

Primary Use : Zero reprocessing delay for high-volume hand/wrist trauma centers.
Material : Medical Polymer / Aluminum / SS • **Spec:** Single-patient sterile-packed wrist fixator with ball-joint lock

TITANIUM / CARBON (Prod. Code)	SS. 316L (Prod. Code)	SPECIFICATION (Diameter / Length)
[Assign Code]	[Assign Code]	Standard Size
[Assign Code]	[Assign Code]	Medium Profile
[Assign Code]	[Assign Code]	Large Profile
[Assign Code]	[Assign Code]	Heavy-Duty Variant



Dynamic Articulated External Fixator for Elbow

055

Primary Use : Stabilizes terrible-triad elbow dislocations while allowing early flexion.
Material : Anodized Aluminum & SS 316L • **Spec:** Hinged coaxial elbow axis + humeral & ulnar pin clamps

TITANIUM / CARBON (Prod. Code)	SS. 316L (Prod. Code)	SPECIFICATION (Diameter / Length)
[Assign Code]	[Assign Code]	Standard Size
[Assign Code]	[Assign Code]	Medium Profile
[Assign Code]	[Assign Code]	Large Profile
[Assign Code]	[Assign Code]	Heavy-Duty Variant



Ankle Spanning External Fixator (Tibiotalar / Calcaneal)

056

Primary Use : Staged damage-control stabilization prior to definitive pilon plating.
Material : Anodized Aluminum & SS 316L • **Spec:** Bridging tibial-to-foot bar with multi-planar ankle articulation

TITANIUM / CARBON (Prod. Code)	SS. 316L (Prod. Code)	SPECIFICATION (Diameter / Length)
[Assign Code]	[Assign Code]	Standard Size
[Assign Code]	[Assign Code]	Medium Profile
[Assign Code]	[Assign Code]	Large Profile
[Assign Code]	[Assign Code]	Heavy-Duty Variant

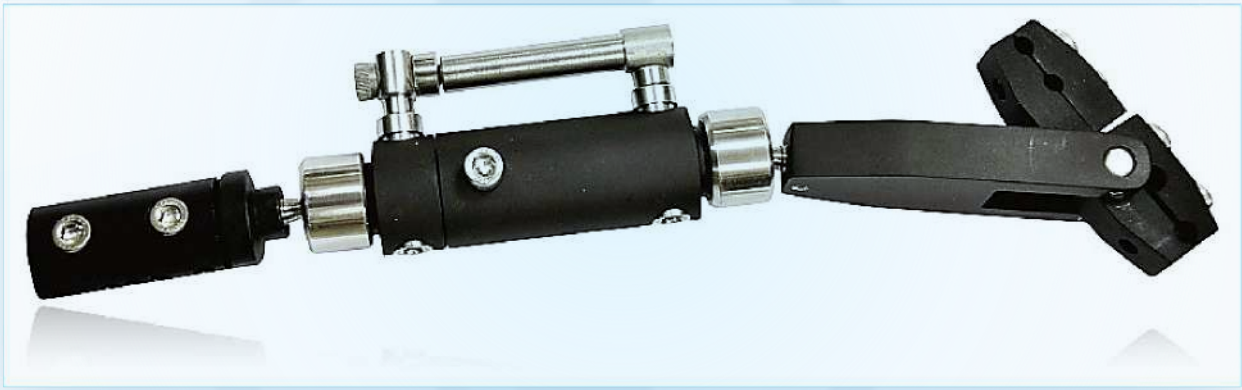

Dynamic External Fixator for Pelvis (Anterior Frame)

057

Primary Use : Life-saving hemodynamic stabilization in open-book pelvic injuries.
Material : Anodized Aluminum & SS 316L • **Spec:** Adjustable pelvic spanning body + dual supra-acetabular pin clamps

TITANIUM / CARBON (Prod. Code)	SS. 316L (Prod. Code)	SPECIFICATION (Diameter / Length)
[Assign Code]	[Assign Code]	Standard Size
[Assign Code]	[Assign Code]	Medium Profile
[Assign Code]	[Assign Code]	Large Profile
[Assign Code]	[Assign Code]	Heavy-Duty Variant



T-Type Pelvic External Fixator (Heavy-Duty Trauma)

058

Primary Use : Provides definitive anterior ring fixation for unstable Tile B/C fractures.
Material : Stainless Steel 316L / Aluminum • **Spec:** Rigid T-bar anterior pelvic bridge; accepts Ø 5.0–6.0 mm pins

TITANIUM / CARBON (Prod. Code)	SS. 316L (Prod. Code)	SPECIFICATION (Diameter / Length)
[Assign Code]	[Assign Code]	Standard Size
[Assign Code]	[Assign Code]	Medium Profile
[Assign Code]	[Assign Code]	Large Profile
[Assign Code]	[Assign Code]	Heavy-Duty Variant



Hand Fixator with Lengthening Device & Ball-Socket Joint

059

Primary Use : Treats complex hand crush injuries, bone loss, and joint stiffness.
Material : Stainless Steel 316L / Aluminum • **Spec:** Length 150 mm; integrated distraction screw + twin ball joints

TITANIUM / CARBON (Prod. Code)	SS. 316L (Prod. Code)	SPECIFICATION (Diameter / Length)
[Assign Code]	[Assign Code]	Standard Size
[Assign Code]	[Assign Code]	Medium Profile
[Assign Code]	[Assign Code]	Large Profile
[Assign Code]	[Assign Code]	Heavy-Duty Variant

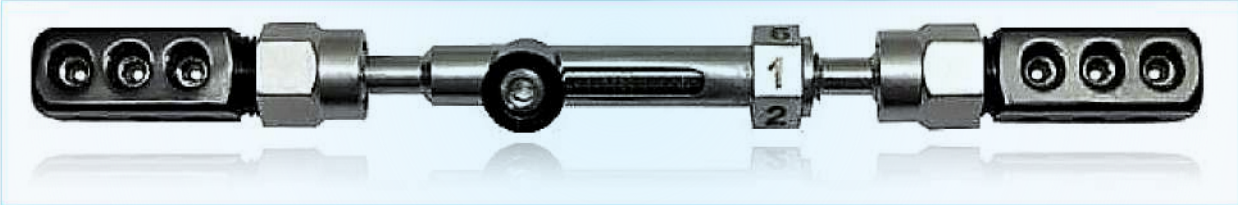

Small Hand Fixator Kit (150 mm, with Allen Key & Spanners)

060

Primary Use : Streamlines emergency hand/thumb distraction and stabilization.
Material : Stainless Steel 316L / Aluminum • **Spec:** 150 mm lengthening ball-joint fixator + Allen key + dual spanners

TITANIUM / CARBON (Prod. Code)	SS. 316L (Prod. Code)	SPECIFICATION (Diameter / Length)
[Assign Code]	[Assign Code]	Standard Size
[Assign Code]	[Assign Code]	Medium Profile
[Assign Code]	[Assign Code]	Large Profile
[Assign Code]	[Assign Code]	Heavy-Duty Variant

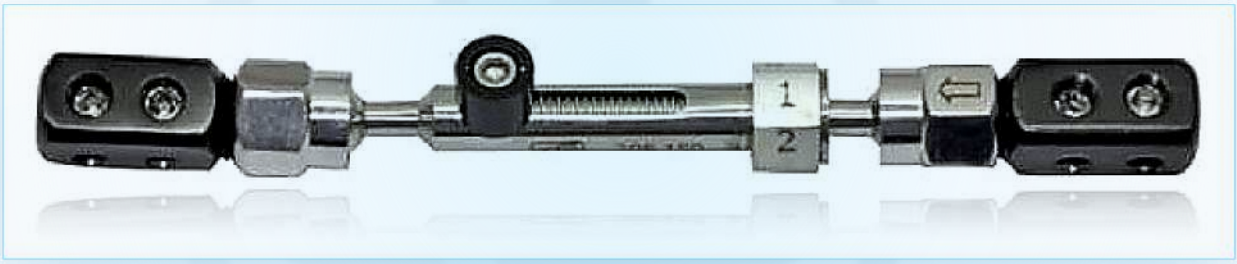

T-Ball-Joint Coupling Clamp (Modular Hybrid)

061

Primary Use : Multi-planar angular coupling for dynamic & hybrid fixator frames.
Material : SS 316L / Anodized Aluminum • **Spec:** 360° T-ball articulation; Ø 11 mm rod

TITANIUM / CARBON (Prod. Code)	SS. 316L (Prod. Code)	SPECIFICATION (Diameter / Length)
[Assign Code]	[Assign Code]	Standard Size
[Assign Code]	[Assign Code]	Medium Profile
[Assign Code]	[Assign Code]	Large Profile
[Assign Code]	[Assign Code]	Heavy-Duty Variant



Ilizarov Half Ring — Carbon Fiber (Radiolucent, 80–240 mm ID)

062

Primary Use : Reduces frame weight by >50% with crystal-clear X-ray visibility.
Material : Medical Carbon Fiber Composite • **Spec:** ID 80, 100, 120, 140, 160, 180, 200, 220, 240 mm; 8 mm thick

TITANIUM / CARBON (Prod. Code)	SS. 316L (Prod. Code)	SPECIFICATION (Diameter / Length)
[Assign Code]	[Assign Code]	ID 120 mm
[Assign Code]	[Assign Code]	ID 140 mm
[Assign Code]	[Assign Code]	ID 160 mm
[Assign Code]	[Assign Code]	ID 180 mm

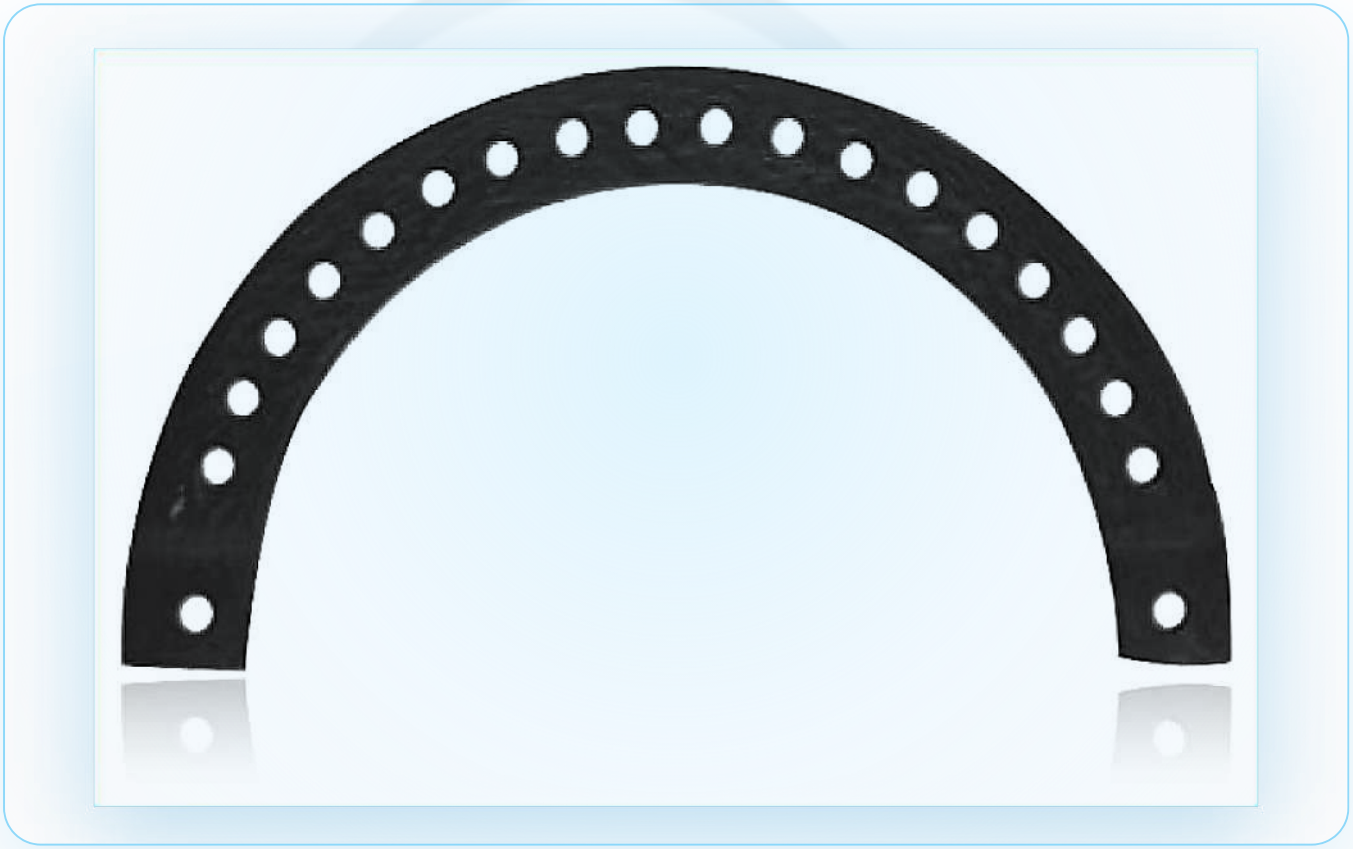

Ilizarov Half Ring — Stainless Steel (Stepless, 80–240 mm ID)

063

Primary Use : Maximum circular stiffness for high-tension (130 kg) wire constructs.
Material : Stainless Steel 316L • **Spec:** ID 80 – 240 mm (20 mm steps); 5 mm thick SS 316L

TITANIUM / CARBON (Prod. Code)	SS. 316L (Prod. Code)	SPECIFICATION (Diameter / Length)
[Assign Code]	[Assign Code]	ID 100 mm
[Assign Code]	[Assign Code]	ID 120 mm
[Assign Code]	[Assign Code]	ID 140 mm
[Assign Code]	[Assign Code]	ID 160 mm
[Assign Code]	[Assign Code]	ID 180 mm
[Assign Code]	[Assign Code]	ID 200 mm

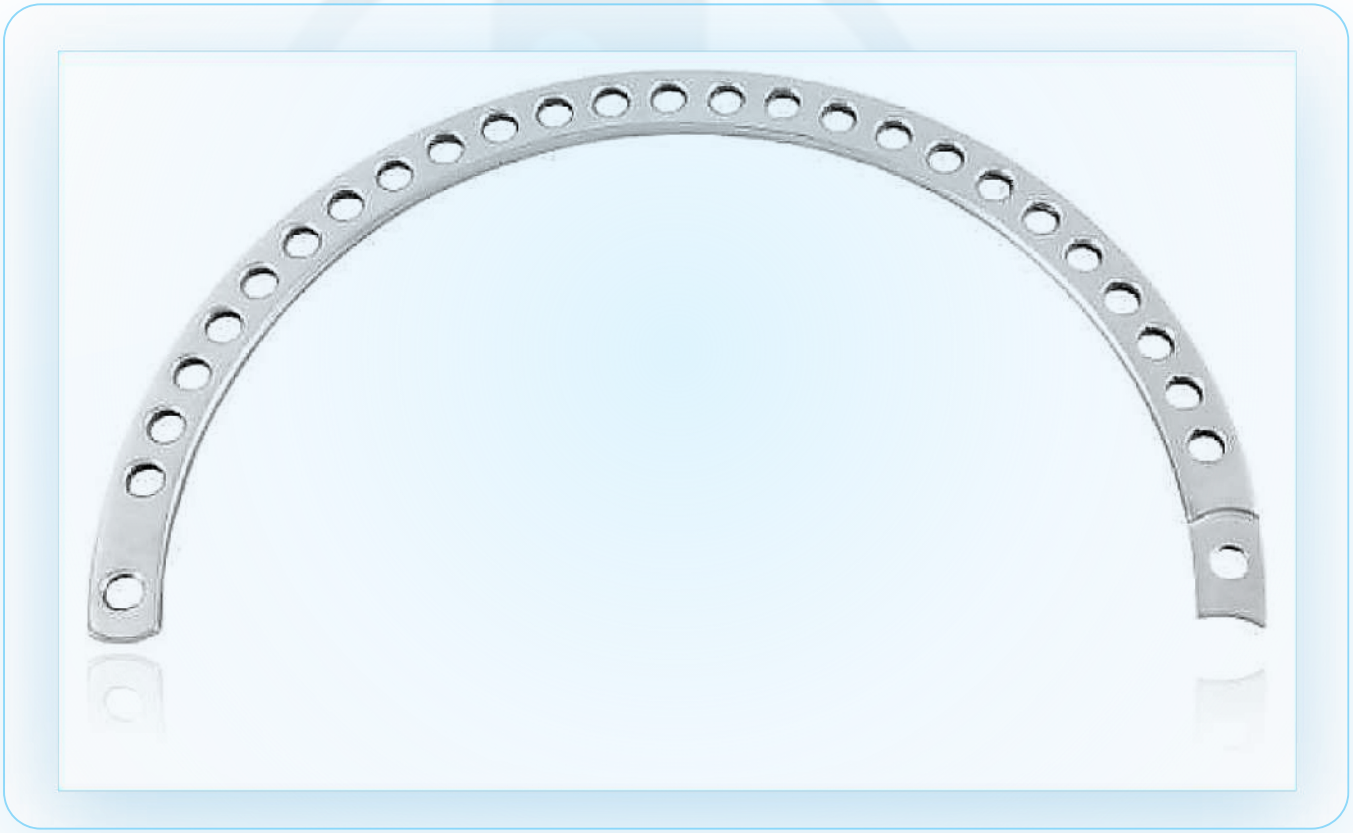

Ilizarov Half Ring — Stainless Steel (Modified Version)

064

Primary Use : Economical, endlessly reusable workhorse ring for limb reconstruction.
Material : Stainless Steel 316L • **Spec:** ID 80 – 240 mm; precision-chamfered M6 hole pattern

TITANIUM / CARBON (Prod. Code)	SS. 316L (Prod. Code)	SPECIFICATION (Diameter / Length)
[Assign Code]	[Assign Code]	ID 100 mm
[Assign Code]	[Assign Code]	ID 120 mm
[Assign Code]	[Assign Code]	ID 140 mm
[Assign Code]	[Assign Code]	ID 160 mm
[Assign Code]	[Assign Code]	ID 180 mm
[Assign Code]	[Assign Code]	ID 200 mm

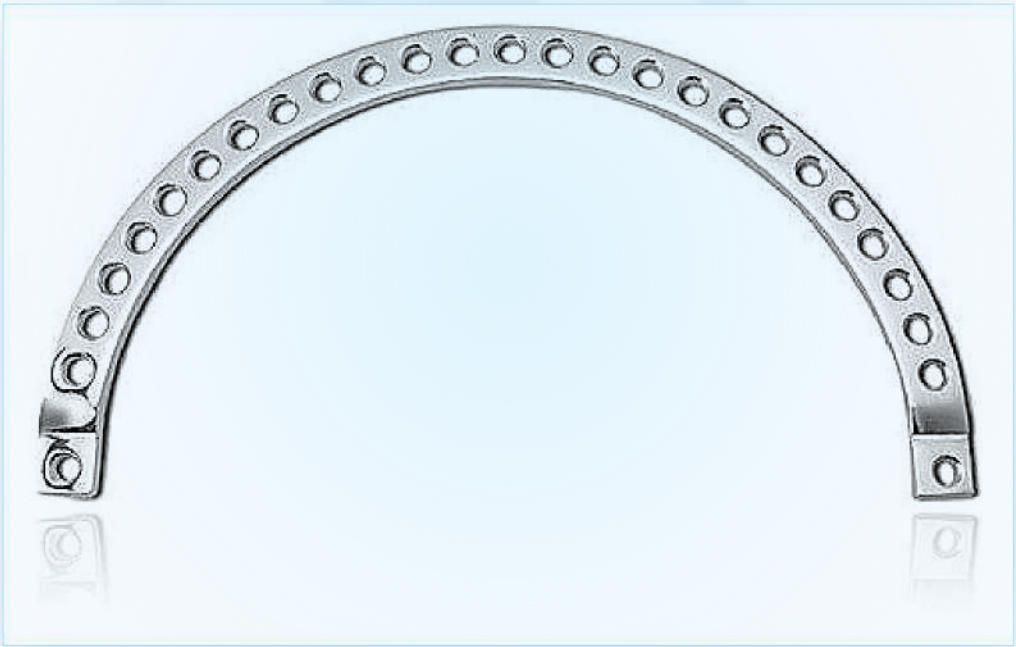

Ilizarov Half Ring — Lightweight Aluminum (Stepless)

065

Primary Use : Ideal for pediatric and multi-ring tibial lengthening frames.
Material : Anodized Medical Aluminum • **Spec:** ID 80 – 240 mm; anodized high-strength aerospace aluminum

TITANIUM / CARBON (Prod. Code)	SS. 316L (Prod. Code)	SPECIFICATION (Diameter / Length)
[Assign Code]	[Assign Code]	ID 100 mm
[Assign Code]	[Assign Code]	ID 120 mm
[Assign Code]	[Assign Code]	ID 140 mm
[Assign Code]	[Assign Code]	ID 160 mm
[Assign Code]	[Assign Code]	ID 180 mm
[Assign Code]	[Assign Code]	ID 200 mm

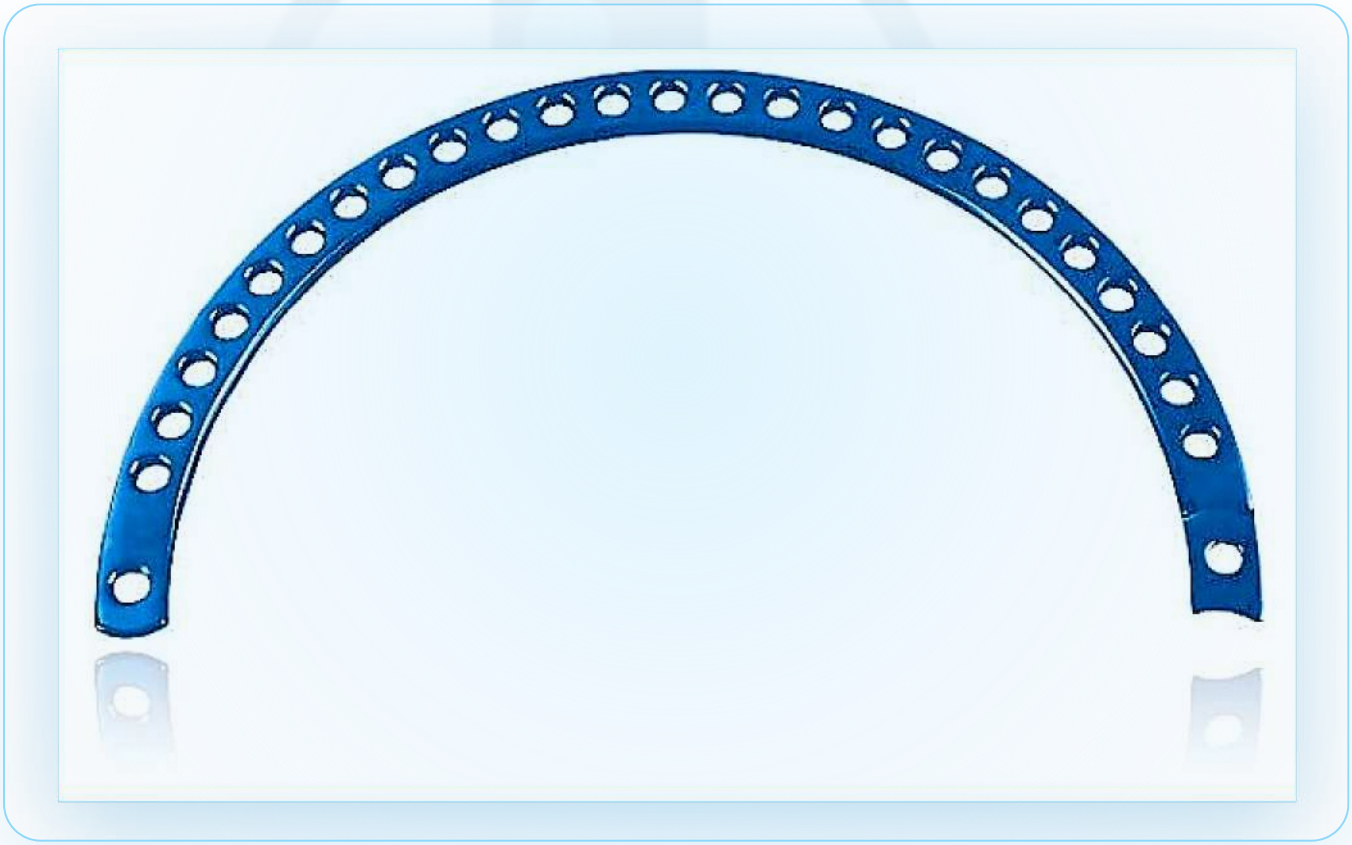

Ilizarov 5/8th Ring — Carbon Fiber (Joint Clearance)

066

Primary Use : Allows full knee or elbow bending without ring-to-thigh impingement.
Material : Medical Carbon Fiber Composite • **Spec:** ID 100 – 220 mm; 225° open arc for knee/elbow flexion

TITANIUM / CARBON (Prod. Code)	SS. 316L (Prod. Code)	SPECIFICATION (Diameter / Length)
[Assign Code]	[Assign Code]	ID 100 mm
[Assign Code]	[Assign Code]	ID 120 mm
[Assign Code]	[Assign Code]	ID 140 mm
[Assign Code]	[Assign Code]	ID 160 mm
[Assign Code]	[Assign Code]	ID 180 mm
[Assign Code]	[Assign Code]	ID 200 mm

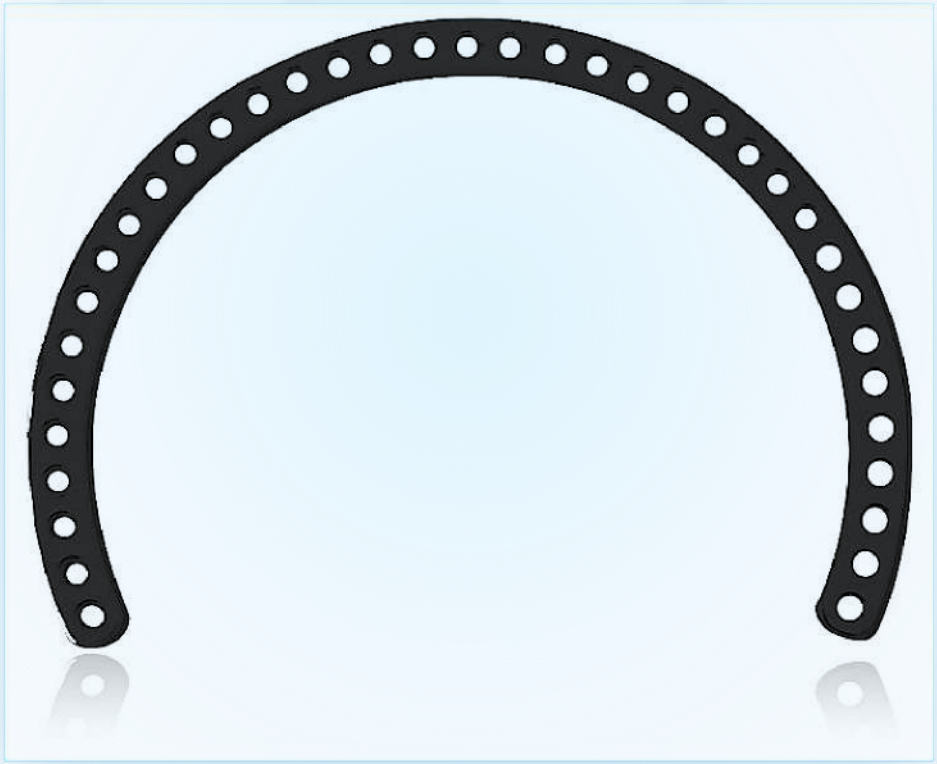

Ilizarov 5/8th Ring — Stainless Steel (Modified Version)

067

Primary Use : Standard proximal tibial and distal femoral joint-clearance ring.
Material : Stainless Steel 316L • **Spec:** ID 100 – 220 mm; 225° arc; 5 mm thick SS 316L

TITANIUM / CARBON (Prod. Code)	SS. 316L (Prod. Code)	SPECIFICATION (Diameter / Length)
[Assign Code]	[Assign Code]	ID 100 mm
[Assign Code]	[Assign Code]	ID 120 mm
[Assign Code]	[Assign Code]	ID 140 mm
[Assign Code]	[Assign Code]	ID 160 mm
[Assign Code]	[Assign Code]	ID 180 mm
[Assign Code]	[Assign Code]	ID 200 mm

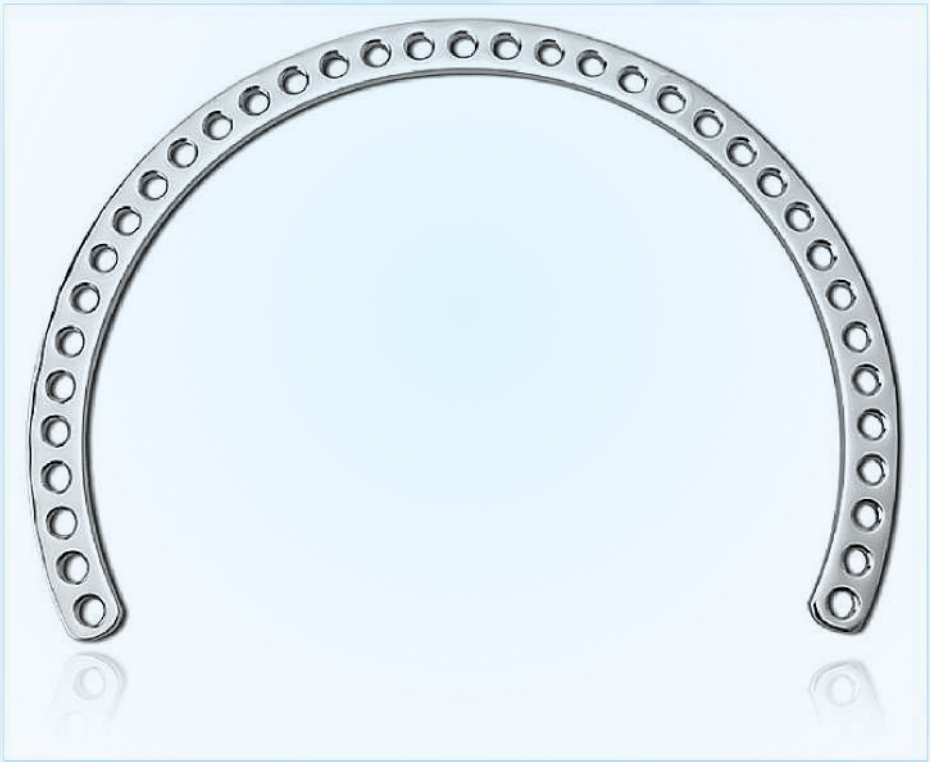

Ilizarov 5/8th Ring — Lightweight Aluminum

068

Primary Use : Comfortable multi-month wear during deformity correction.
Material : Anodized Medical Aluminum • **Spec:** ID 100 – 220 mm; 225° open arc; anodized aluminum

TITANIUM / CARBON (Prod. Code)	SS. 316L (Prod. Code)	SPECIFICATION (Diameter / Length)
[Assign Code]	[Assign Code]	ID 100 mm
[Assign Code]	[Assign Code]	ID 120 mm
[Assign Code]	[Assign Code]	ID 140 mm
[Assign Code]	[Assign Code]	ID 160 mm
[Assign Code]	[Assign Code]	ID 180 mm
[Assign Code]	[Assign Code]	ID 200 mm

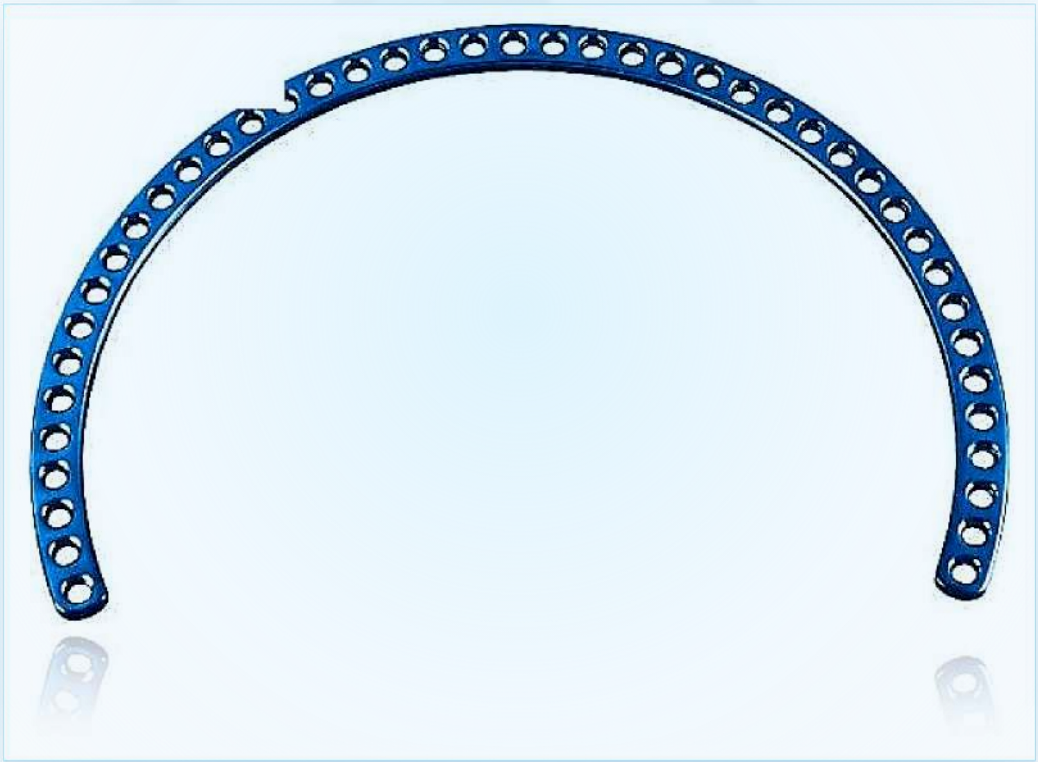

Ilizarov Foot Ring — Long Adult (Carbon Fiber)

069

Primary Use : Unobstructed lateral ankle and subtalar X-rays during foot correction.
Material : Medical Carbon Fiber Composite • **Spec:** ID 120, 140, 160, 180 mm; extended forefoot/calcaneal U-arc

TITANIUM / CARBON (Prod. Code)	SS. 316L (Prod. Code)	SPECIFICATION (Diameter / Length)
[Assign Code]	[Assign Code]	ID 120 mm
[Assign Code]	[Assign Code]	ID 140 mm
[Assign Code]	[Assign Code]	ID 160 mm
[Assign Code]	[Assign Code]	ID 180 mm



Ilizarov Foot Ring — Short Adult (Carbon Fiber)

070

Primary Use : Minimizes forefoot bulk while providing rigid calcaneal wire fixation.
Material : Medical Carbon Fiber Composite • **Spec:** ID 120, 140, 160 mm; compact calcaneal U-arc

TITANIUM / CARBON (Prod. Code)	SS. 316L (Prod. Code)	SPECIFICATION (Diameter / Length)
[Assign Code]	[Assign Code]	ID 120 mm
[Assign Code]	[Assign Code]	ID 140 mm
[Assign Code]	[Assign Code]	ID 160 mm
[Assign Code]	[Assign Code]	ID 180 mm

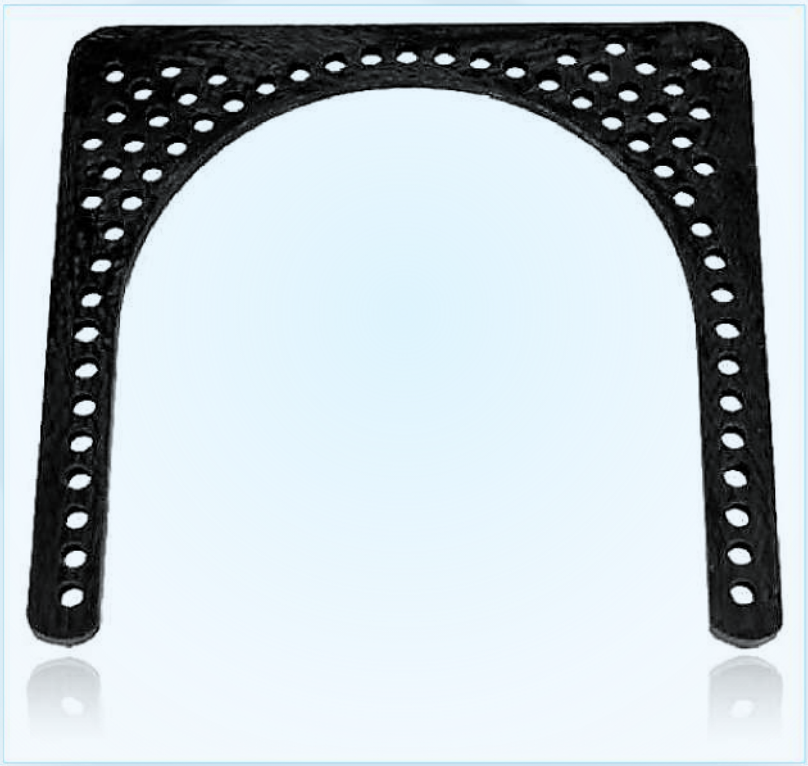

Ilizarov Foot Ring — Long Adult (Stainless Steel)

071

Primary Use : Ideal for complex clubfoot, Charcot, and hindfoot arthrodesis frames.
Material : Stainless Steel 316L • **Spec:** ID 120 – 180 mm; full-length stainless U-plate

TITANIUM / CARBON (Prod. Code)	SS. 316L (Prod. Code)	SPECIFICATION (Diameter / Length)
[Assign Code]	[Assign Code]	ID 120 mm
[Assign Code]	[Assign Code]	ID 140 mm
[Assign Code]	[Assign Code]	ID 160 mm
[Assign Code]	[Assign Code]	ID 180 mm



Ilizarov Foot Ring — Short Adult (Stainless Steel)

072

Primary Use : Resists wire-tension bow under heavy adult loads.
Material : Stainless Steel 316L • **Spec:** ID 120 – 160 mm; short heel U-plate

TITANIUM / CARBON (Prod. Code)	SS. 316L (Prod. Code)	SPECIFICATION (Diameter / Length)
[Assign Code]	[Assign Code]	Standard Size
[Assign Code]	[Assign Code]	Medium Profile
[Assign Code]	[Assign Code]	Large Profile
[Assign Code]	[Assign Code]	Heavy-Duty Variant



Ilizarov Foot Ring — Long & Short Adult (Aluminum)

073

Primary Use : Popular choice for pediatric and adult foot deformity reconstruction.
Material : Anodized Medical Aluminum • **Spec:** ID 120 – 180 mm; Long & Short anodized aluminum U-rings

TITANIUM / CARBON (Prod. Code)	SS. 316L (Prod. Code)	SPECIFICATION (Diameter / Length)
[Assign Code]	[Assign Code]	ID 120 mm
[Assign Code]	[Assign Code]	ID 140 mm
[Assign Code]	[Assign Code]	ID 160 mm
[Assign Code]	[Assign Code]	ID 180 mm

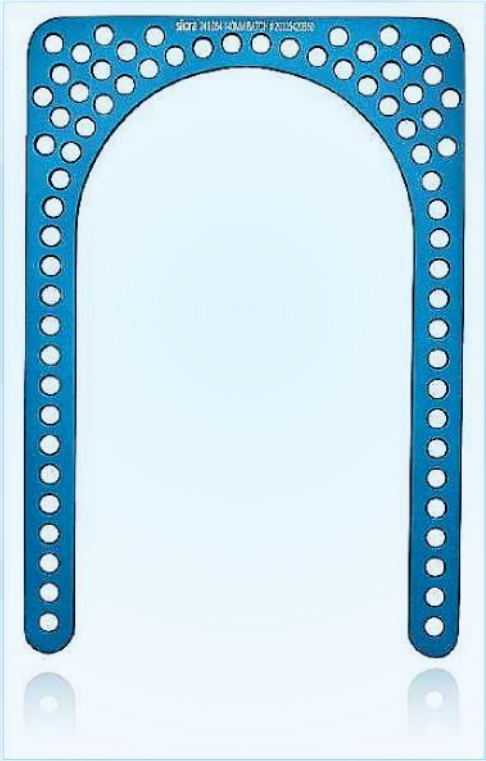

Italian Femoral Arch — Carbon Fiber (Radiolucent)

074

Primary Use : Lightweight proximal anchor for femoral Ilizarov and hybrid frames.
Material : Medical Carbon Fiber Composite • **Spec:** 90° & 120° open femoral arch; multi-row half-pin holes

TITANIUM / CARBON (Prod. Code)	SS. 316L (Prod. Code)	SPECIFICATION (Diameter / Length)
[Assign Code]	[Assign Code]	Standard Size
[Assign Code]	[Assign Code]	Medium Profile
[Assign Code]	[Assign Code]	Large Profile
[Assign Code]	[Assign Code]	Heavy-Duty Variant



Italian Femoral Arch — 90° & 120° (Stainless Steel)

075

Primary Use : Withstands high proximal femoral cantilever bending loads.
Material : Stainless Steel 316L • **Spec:** 90° & 120° open femoral arches; heavy-gauge SS 316L

TITANIUM / CARBON (Prod. Code)	SS. 316L (Prod. Code)	SPECIFICATION (Diameter / Length)
[Assign Code]	[Assign Code]	Standard Size
[Assign Code]	[Assign Code]	Medium Profile
[Assign Code]	[Assign Code]	Large Profile
[Assign Code]	[Assign Code]	Heavy-Duty Variant

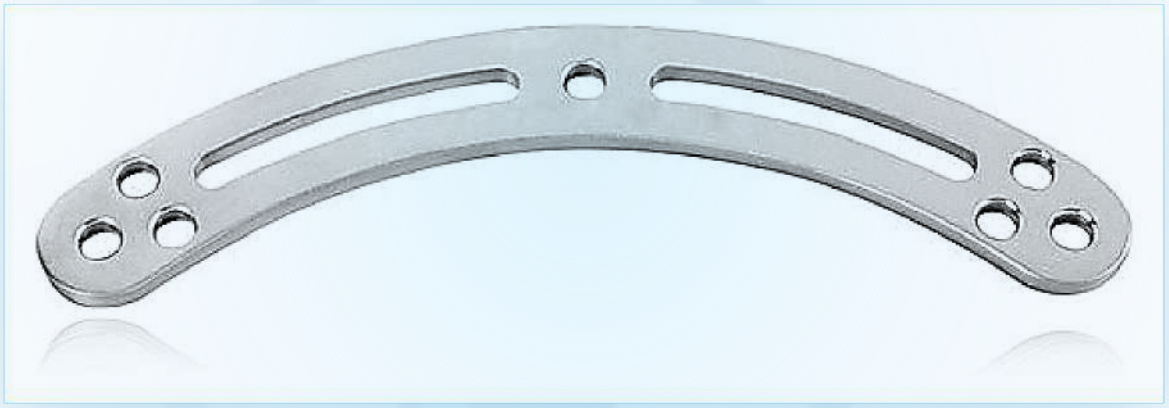

Italian Femoral Arch — 120° Wide Arc (Stainless Steel)

076

Primary Use : Provides superior rotational control in proximal femoral osteotomies.
Material : Stainless Steel 316L • **Spec:** 120° extended femoral arch; dual-row M6 mounting holes

TITANIUM / CARBON (Prod. Code)	SS. 316L (Prod. Code)	SPECIFICATION (Diameter / Length)
[Assign Code]	[Assign Code]	Standard Size
[Assign Code]	[Assign Code]	Medium Profile
[Assign Code]	[Assign Code]	Large Profile
[Assign Code]	[Assign Code]	Heavy-Duty Variant

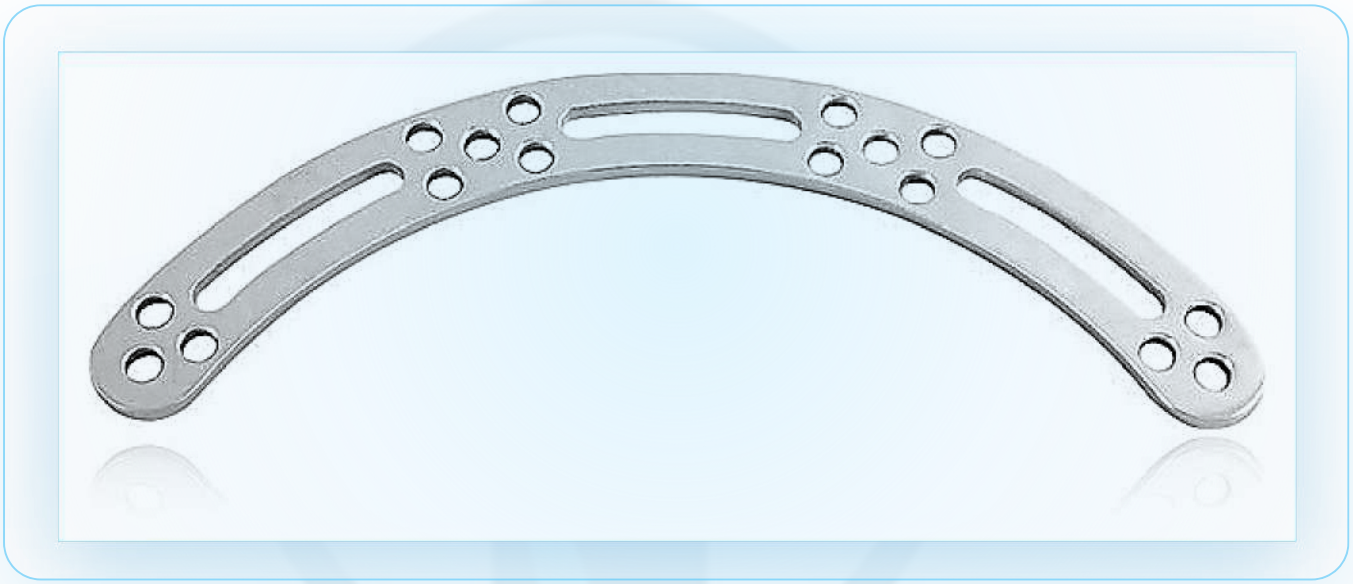

Italian Femoral Arch — 90° & 120° (Lightweight Aluminum)

077

Primary Use : Preferred for prolonged femoral lengthening and nonunion treatment.
Material : Anodized Medical Aluminum • **Spec:** 90° & 120° anodized aluminum arches + complete ring-arch set option

TITANIUM / CARBON (Prod. Code)	SS. 316L (Prod. Code)	SPECIFICATION (Diameter / Length)
[Assign Code]	[Assign Code]	Standard Size
[Assign Code]	[Assign Code]	Medium Profile
[Assign Code]	[Assign Code]	Large Profile
[Assign Code]	[Assign Code]	Heavy-Duty Variant

IMAGE REQUIRED

Studio Mirror-Shine Photograph Pending • Product #077

Ilizarov Foot Ring — Short Adult (Aluminum)

078

Primary Use : Lightweight short calcaneal foot ring for ankle & equinus frames.
Material : SS 316L / Anodized Aluminum • **Spec:** ID 120, 140, 160 mm; anodized aluminum

TITANIUM / CARBON (Prod. Code)	SS. 316L (Prod. Code)	SPECIFICATION (Diameter / Length)
[Assign Code]	[Assign Code]	ID 120 mm
[Assign Code]	[Assign Code]	ID 140 mm
[Assign Code]	[Assign Code]	ID 160 mm
[Assign Code]	[Assign Code]	ID 180 mm

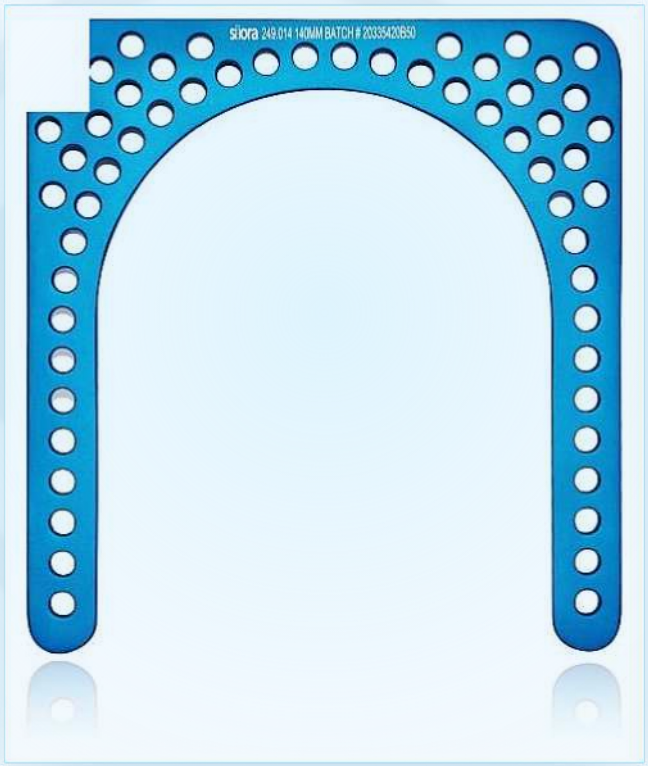

Italian Femoral Arch — 90° (Lightweight Aluminum)

079

Primary Use : Lightweight proximal femoral arch for hybrid & Ilizarov frames.
Material : SS 316L / Anodized Aluminum • **Spec:** 90° open arc; dual-row M6 mounting holes

TITANIUM / CARBON (Prod. Code)	SS. 316L (Prod. Code)	SPECIFICATION (Diameter / Length)
[Assign Code]	[Assign Code]	Standard Size
[Assign Code]	[Assign Code]	Medium Profile
[Assign Code]	[Assign Code]	Large Profile
[Assign Code]	[Assign Code]	Heavy-Duty Variant



Ilizarov Threaded Rod — Standard M6 (60 mm – 400 mm)

080

Primary Use : Core vertical strut connecting circular rings across the limb.
Material : Stainless Steel 316L • **Spec:** M6 × 1.0 mm pitch; lengths 60, 80, 100, 120, 150, 200, 250, 300, 400 mm

TITANIUM / CARBON (Prod. Code)	SS. 316L (Prod. Code)	SPECIFICATION (Diameter / Length)
[Assign Code]	[Assign Code]	Standard Size
[Assign Code]	[Assign Code]	Medium Profile
[Assign Code]	[Assign Code]	Large Profile
[Assign Code]	[Assign Code]	Heavy-Duty Variant

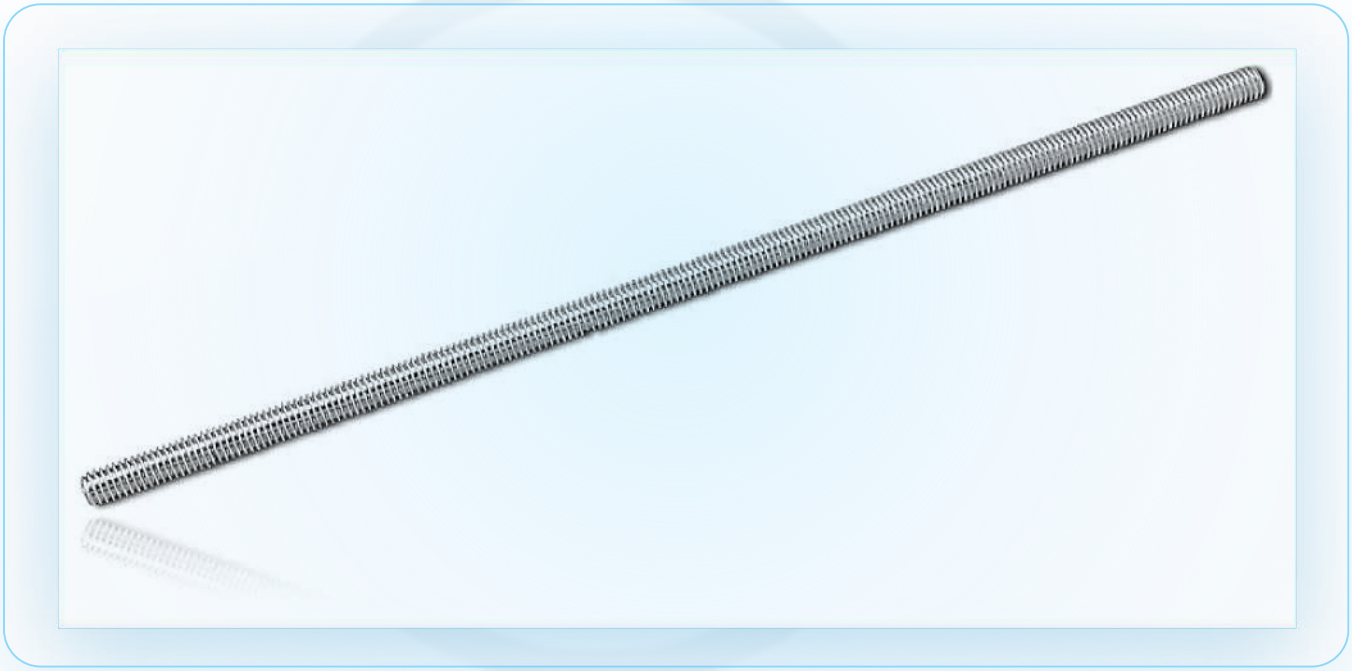

Ilizarov Threaded Rod — Slotted (Wire-Clearance)

081

Primary Use : Prevents rod spinning while tightening ring nuts.
Material : Stainless Steel 316L • **Spec:** M6 × 1.0 mm; lengths 100 – 300 mm; longitudinal central slot

TITANIUM / CARBON (Prod. Code)	SS. 316L (Prod. Code)	SPECIFICATION (Diameter / Length)
[Assign Code]	[Assign Code]	Standard Size
[Assign Code]	[Assign Code]	Medium Profile
[Assign Code]	[Assign Code]	Large Profile
[Assign Code]	[Assign Code]	Heavy-Duty Variant

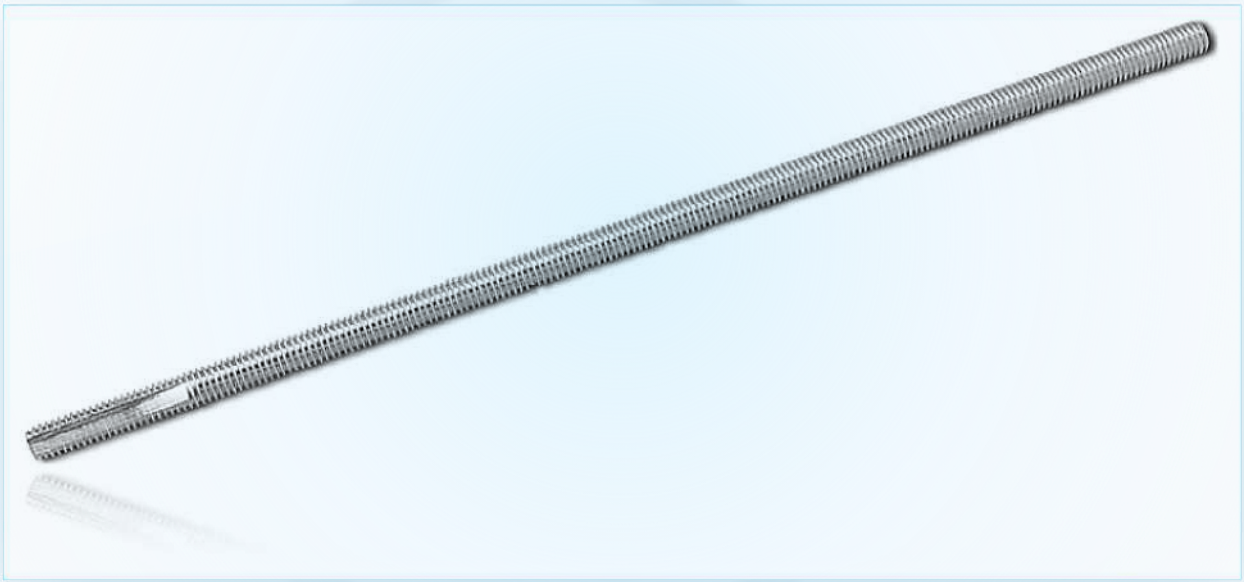

Ilizarov Threaded Rod with Hex Drive End

082

Primary Use : Speeds intraoperative and outpatient distraction adjustments.
Material : Stainless Steel 316L • **Spec:** M6 × 1.0 mm; lengths 80 – 300 mm; integrated 10 mm hex drive

TITANIUM / CARBON (Prod. Code)	SS. 316L (Prod. Code)	SPECIFICATION (Diameter / Length)
[Assign Code]	[Assign Code]	Standard Size
[Assign Code]	[Assign Code]	Medium Profile
[Assign Code]	[Assign Code]	Large Profile
[Assign Code]	[Assign Code]	Heavy-Duty Variant

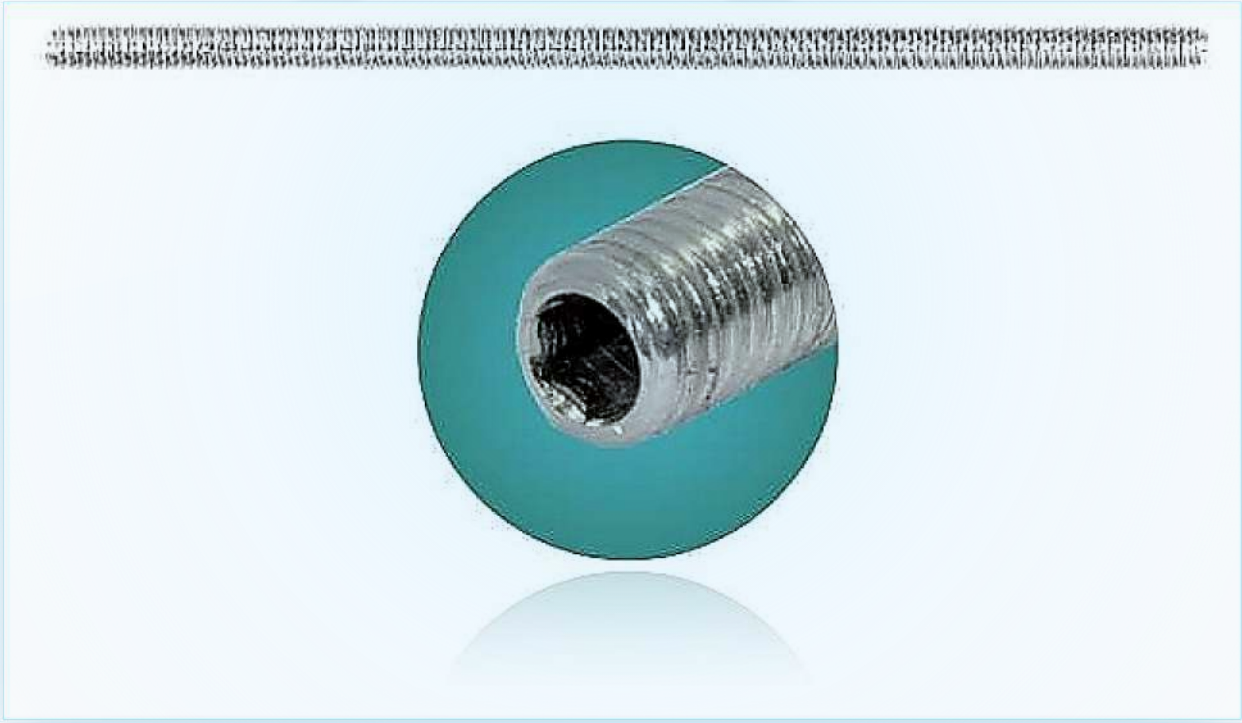

Telescopic Rod (Ilizarov Progressive Distraction Strut)

083

Primary Use : Smooth, jam-free distraction during multi-centimeter limb lengthening.
Material : Stainless Steel 316L • **Spec:** Closed 100–200 mm; extendable stroke +50 to +120 mm

TITANIUM / CARBON (Prod. Code)	SS. 316L (Prod. Code)	SPECIFICATION (Diameter / Length)
[Assign Code]	[Assign Code]	Standard Size
[Assign Code]	[Assign Code]	Medium Profile
[Assign Code]	[Assign Code]	Large Profile
[Assign Code]	[Assign Code]	Heavy-Duty Variant

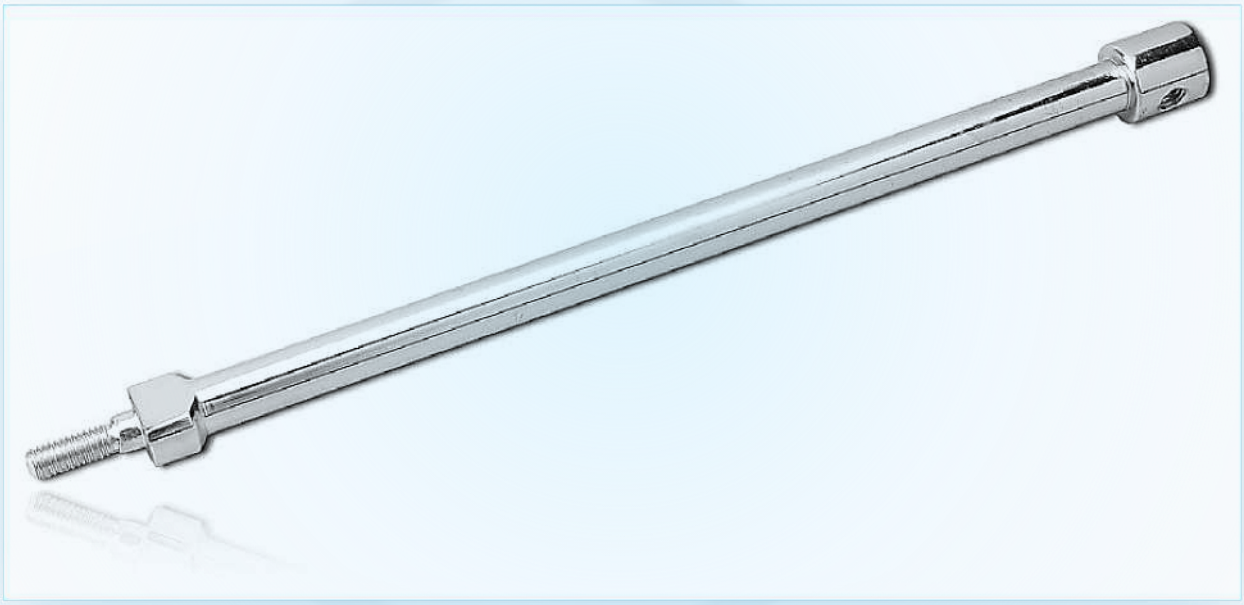

Graduated Telescopic Rod (Calibrated Distraction Scale)

084

Primary Use : Eliminates patient counting errors during daily bone lengthening.
Material : Stainless Steel 316L • **Spec:** Laser-etched millimeter scale + click-stop quarter-turn collar

TITANIUM / CARBON (Prod. Code)	SS. 316L (Prod. Code)	SPECIFICATION (Diameter / Length)
[Assign Code]	[Assign Code]	Standard Size
[Assign Code]	[Assign Code]	Medium Profile
[Assign Code]	[Assign Code]	Large Profile
[Assign Code]	[Assign Code]	Heavy-Duty Variant



Ilizarov Hinge — Male & Female (Uni-Planar Articulation)

085

Primary Use : Drives controlled angular deformity correction without translation.
Material : Stainless Steel 316L • **Spec:** M6 threaded stem; 180° smooth articulation; paired Male/Female

TITANIUM / CARBON (Prod. Code)	SS. 316L (Prod. Code)	SPECIFICATION (Diameter / Length)
[Assign Code]	[Assign Code]	Standard Size
[Assign Code]	[Assign Code]	Medium Profile
[Assign Code]	[Assign Code]	Large Profile
[Assign Code]	[Assign Code]	Heavy-Duty Variant

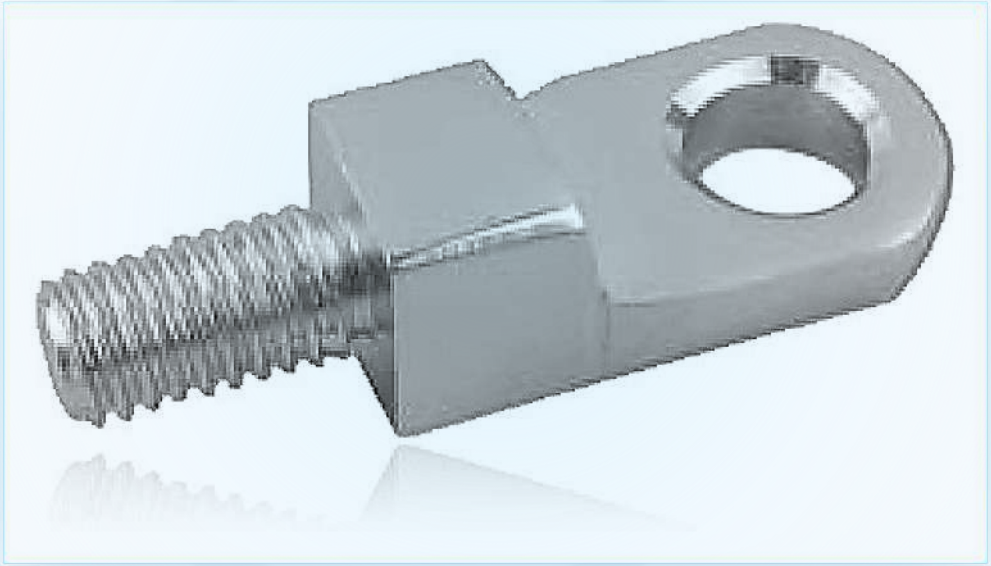

Ilizarov Hinge — Female (M6 Internal Thread)

086

Primary Use : Minimizes hinge stack height around ankle and knee joints.
Material : Stainless Steel 316L • **Spec:** M6 internal thread; pairs with Male Hinge or threaded rod

TITANIUM / CARBON (Prod. Code)	SS. 316L (Prod. Code)	SPECIFICATION (Diameter / Length)
[Assign Code]	[Assign Code]	Standard Size
[Assign Code]	[Assign Code]	Medium Profile
[Assign Code]	[Assign Code]	Large Profile
[Assign Code]	[Assign Code]	Heavy-Duty Variant

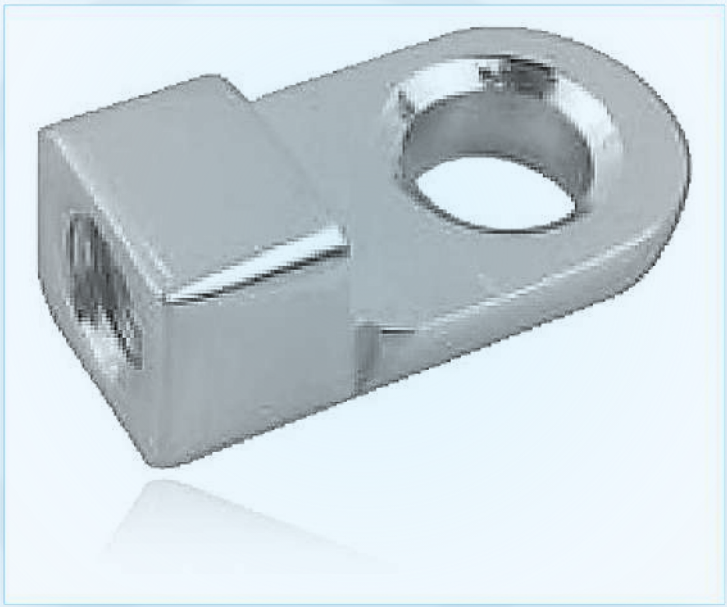

Ilizarov 90° Right-Angle Hinge

087

Primary Use : Essential component for ankle contracture and clubfoot frames.
Material : Stainless Steel 316L • **Spec:** 90° offset clevis; M6 threaded mount

TITANIUM / CARBON (Prod. Code)	SS. 316L (Prod. Code)	SPECIFICATION (Diameter / Length)
[Assign Code]	[Assign Code]	Standard Size
[Assign Code]	[Assign Code]	Medium Profile
[Assign Code]	[Assign Code]	Large Profile
[Assign Code]	[Assign Code]	Heavy-Duty Variant

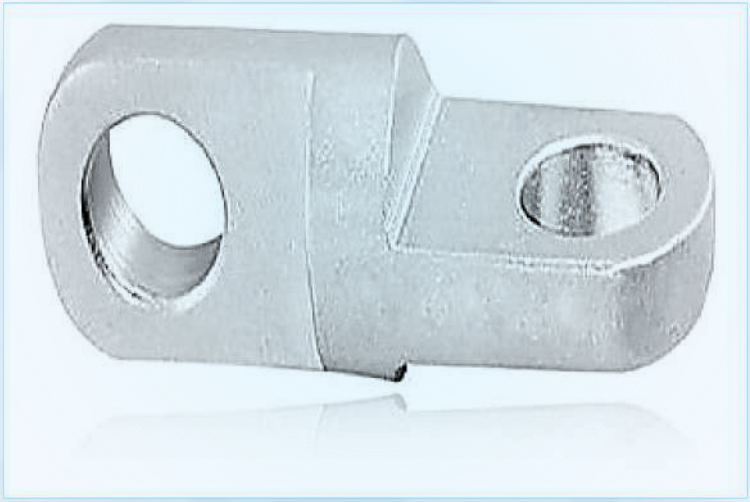

Universal Multi-Planar Hinge & Hinge Joint

088

Primary Use : Simplifies complex two-plane deformity frame assembly.
Material : Stainless Steel 316L • **Spec:** 360° dual-axis universal joint; M6 mounting

TITANIUM / CARBON (Prod. Code)	SS. 316L (Prod. Code)	SPECIFICATION (Diameter / Length)
[Assign Code]	[Assign Code]	Standard Size
[Assign Code]	[Assign Code]	Medium Profile
[Assign Code]	[Assign Code]	Large Profile
[Assign Code]	[Assign Code]	Heavy-Duty Variant



Ilizarov Post — Male & Female (2-Hole to 4-Hole Drop Posts)

089

Primary Use : Captures short metaphyseal fragments without adding another ring.
Material : Stainless Steel 316L • **Spec:** 2, 3, and 4-hole vertical posts; M6 male stud or female bore

TITANIUM / CARBON (Prod. Code)	SS. 316L (Prod. Code)	SPECIFICATION (Diameter / Length)
[Assign Code]	[Assign Code]	Standard Size
[Assign Code]	[Assign Code]	Medium Profile
[Assign Code]	[Assign Code]	Large Profile
[Assign Code]	[Assign Code]	Heavy-Duty Variant

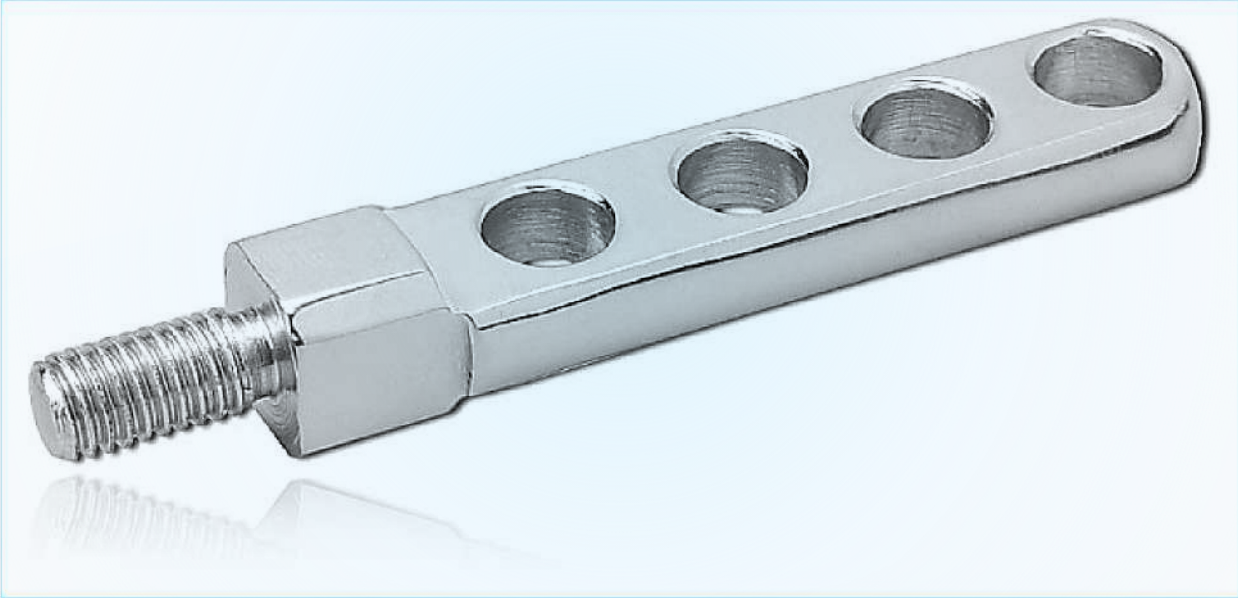

Ilizarov Short Connection Plate — Carbon Fiber & Stainless

090

Primary Use : Radiolucent carbon option keeps distal tibia/ankle X-rays clear.
Material : Carbon Fiber / SS 316L • **Spec:** 2, 3, 4, 5, 7-hole straight extension plates (Carbon & SS 316L)

TITANIUM / CARBON (Prod. Code)	SS. 316L (Prod. Code)	SPECIFICATION (Diameter / Length)
[Assign Code]	[Assign Code]	Standard Size
[Assign Code]	[Assign Code]	Medium Profile
[Assign Code]	[Assign Code]	Large Profile
[Assign Code]	[Assign Code]	Heavy-Duty Variant



Connection Plate with Threaded End (Drop-Plate Strut)

091

Primary Use : Secures oblique struts and drop-wires in crowded periarticular zones.
Material : Stainless Steel 316L • **Spec:** 3 to 7 holes + integral M6 threaded stud end

TITANIUM / CARBON (Prod. Code)	SS. 316L (Prod. Code)	SPECIFICATION (Diameter / Length)
[Assign Code]	[Assign Code]	Standard Size
[Assign Code]	[Assign Code]	Medium Profile
[Assign Code]	[Assign Code]	Large Profile
[Assign Code]	[Assign Code]	Heavy-Duty Variant



Twisted Plate & Curved Connection Plate (90° Offset)

092

Primary Use : Connects perpendicular foot rings and oblique distraction rods cleanly.
Material : Stainless Steel 316L • **Spec:** 90° twisted 2–4 hole plate & curved arc extension plate

TITANIUM / CARBON (Prod. Code)	SS. 316L (Prod. Code)	SPECIFICATION (Diameter / Length)
[Assign Code]	[Assign Code]	Standard Size
[Assign Code]	[Assign Code]	Medium Profile
[Assign Code]	[Assign Code]	Large Profile
[Assign Code]	[Assign Code]	Heavy-Duty Variant

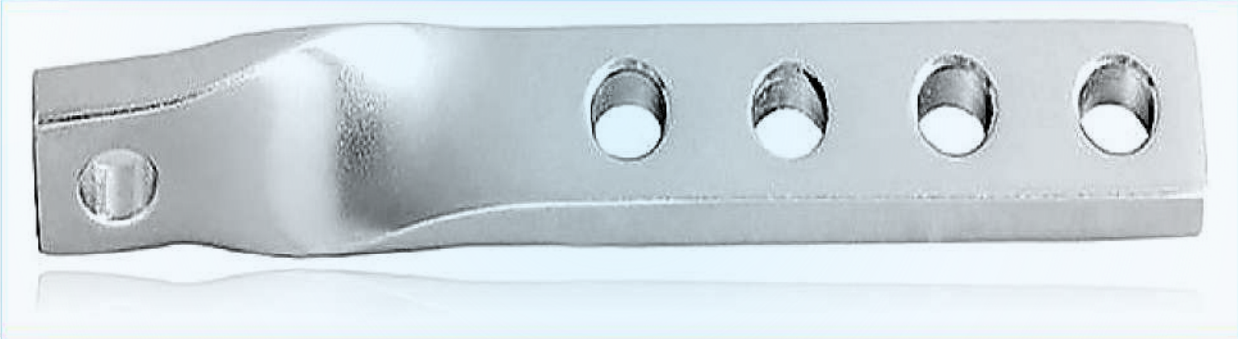

Oblique Support with Thread & Lengthening Fixator (Large/Med/Small)

093

Primary Use : Provides rock-solid strut anchorage across oblique ring planes.
Material : Stainless Steel 316L / Aluminum • **Spec:** Angled support bracket + modular lengthening bodies (S/M/L)

TITANIUM / CARBON (Prod. Code)	SS. 316L (Prod. Code)	SPECIFICATION (Diameter / Length)
[Assign Code]	[Assign Code]	Standard Size
[Assign Code]	[Assign Code]	Medium Profile
[Assign Code]	[Assign Code]	Large Profile
[Assign Code]	[Assign Code]	Heavy-Duty Variant



Ilizarov Hinge Joint — Compact Dual-Axis

094

Primary Use : Precision stainless steel hinge joint for CORA deformity correction.
Material : SS 316L / Anodized Aluminum • **Spec:** M6 threaded stem; 180° articulation

TITANIUM / CARBON (Prod. Code)	SS. 316L (Prod. Code)	SPECIFICATION (Diameter / Length)
[Assign Code]	[Assign Code]	Standard Size
[Assign Code]	[Assign Code]	Medium Profile
[Assign Code]	[Assign Code]	Large Profile
[Assign Code]	[Assign Code]	Heavy-Duty Variant

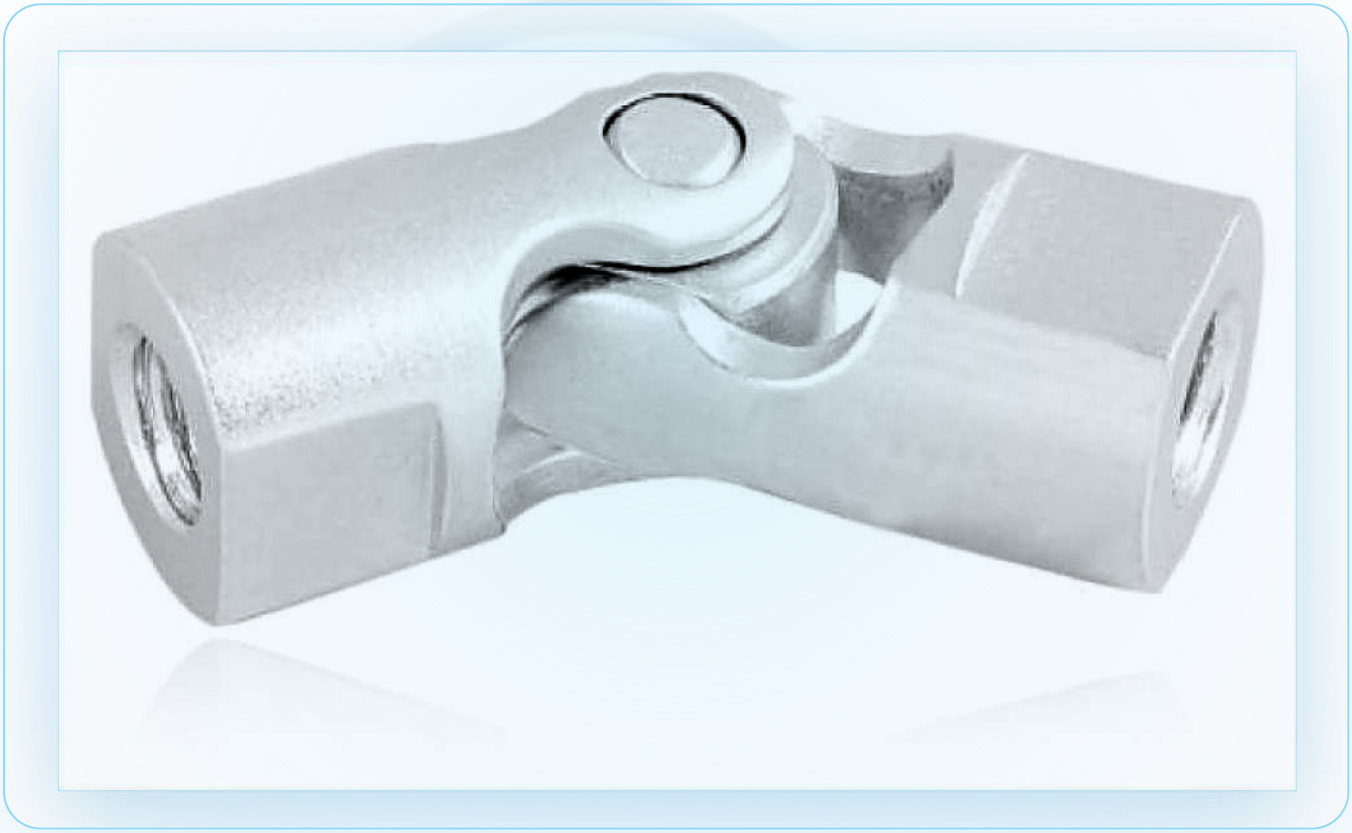

Ilizarov Post — Female (2-Hole to 4-Hole Drop Post)

095

Primary Use : Offsets wire-fixation bolts or hinges out of primary ring plane.
Material : SS 316L / Anodized Aluminum • **Spec:** 2, 3 & 4-hole vertical posts; M6 female

TITANIUM / CARBON (Prod. Code)	SS. 316L (Prod. Code)	SPECIFICATION (Diameter / Length)
[Assign Code]	[Assign Code]	Standard Size
[Assign Code]	[Assign Code]	Medium Profile
[Assign Code]	[Assign Code]	Large Profile
[Assign Code]	[Assign Code]	Heavy-Duty Variant

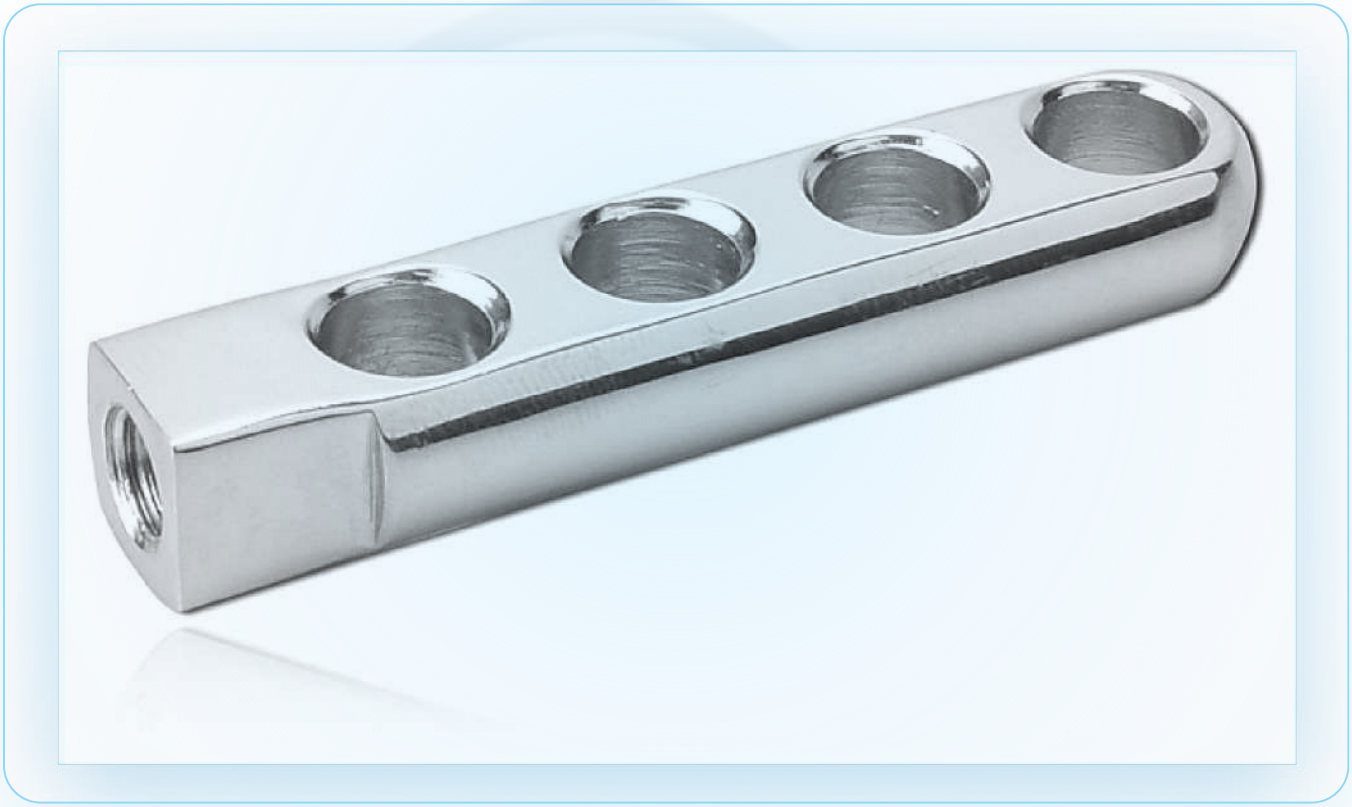

Oblique Support with Thread (Angled Strut Bracket)

096

Primary Use : Bridges non-parallel rings cleanly during angular correction.
Material : SS 316L / Anodized Aluminum • **Spec:** Angled M6 support bracket; SS 316L

TITANIUM / CARBON (Prod. Code)	SS. 316L (Prod. Code)	SPECIFICATION (Diameter / Length)
[Assign Code]	[Assign Code]	Standard Size
[Assign Code]	[Assign Code]	Medium Profile
[Assign Code]	[Assign Code]	Large Profile
[Assign Code]	[Assign Code]	Heavy-Duty Variant

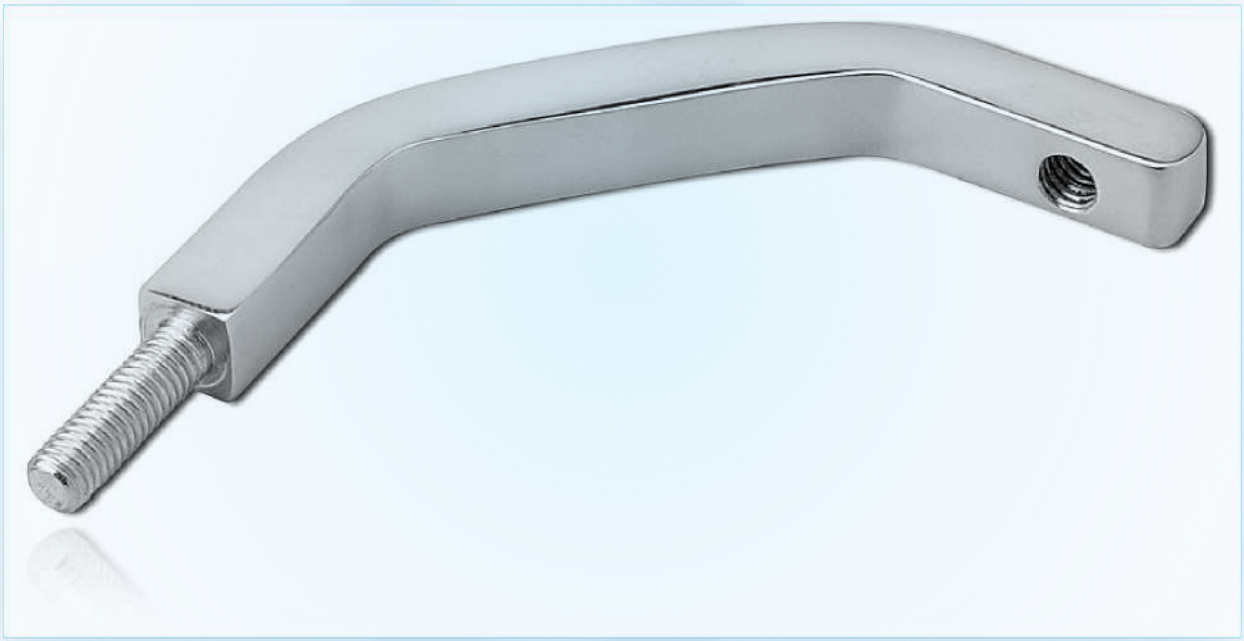

Hybrid Straight Clamp (Ring-to-11 mm Tubular Rod)

097

Primary Use : Gold-standard hybrid fixation for tibial plateau and pilon fractures.
Material : Stainless Steel 316L • **Spec:** Couples Ilizarov ring to Ø 11.0 mm tubular/carbon rod straight

TITANIUM / CARBON (Prod. Code)	SS. 316L (Prod. Code)	SPECIFICATION (Diameter / Length)
[Assign Code]	[Assign Code]	Standard Size
[Assign Code]	[Assign Code]	Medium Profile
[Assign Code]	[Assign Code]	Large Profile
[Assign Code]	[Assign Code]	Heavy-Duty Variant



Hybrid Right-Angle Clamp (90° Ring-to-Rod Connector)

098

Primary Use : Maximizes soft-tissue clearance over anterior tibia and distal femur.
Material : Stainless Steel 316L • **Spec:** 90° transition from circular ring to Ø 11.0 mm tubular bar

TITANIUM / CARBON (Prod. Code)	SS. 316L (Prod. Code)	SPECIFICATION (Diameter / Length)
[Assign Code]	[Assign Code]	Standard Size
[Assign Code]	[Assign Code]	Medium Profile
[Assign Code]	[Assign Code]	Large Profile
[Assign Code]	[Assign Code]	Heavy-Duty Variant

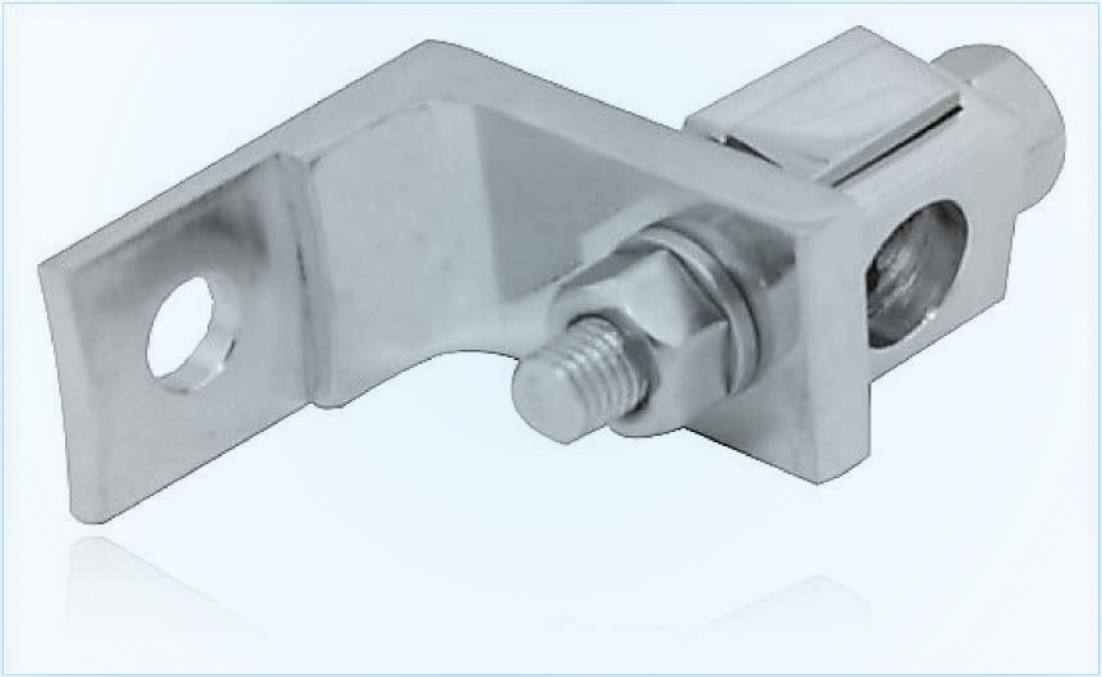

Hybrid Male, Female & End Rods (75 mm / 100 mm / 125 mm)

099

Primary Use : Provides adjustable standoff height between ring and shaft clamps.
Material : Stainless Steel 316L • **Spec:** End 75 mm, Female 100 mm, Male 125 mm; hybrid M6/tube interface

TITANIUM / CARBON (Prod. Code)	SS. 316L (Prod. Code)	SPECIFICATION (Diameter / Length)
[Assign Code]	[Assign Code]	Standard Size
[Assign Code]	[Assign Code]	Medium Profile
[Assign Code]	[Assign Code]	Large Profile
[Assign Code]	[Assign Code]	Heavy-Duty Variant



Metaphyseal & Ankle Hybrid Clamp (Multi-Pin Periarticular)

Primary Use : Rapid hybrid alternative when full circular wire ring is unnecessary.
Material : Anodized Aluminum & SS 316L • **Spec:** Curved metaphyseal/ankle clamp accepts 3–4 pins + Ø 11 mm rod

TITANIUM / CARBON (Prod. Code)	SS. 316L (Prod. Code)	SPECIFICATION (Diameter / Length)
[Assign Code]	[Assign Code]	Standard Size
[Assign Code]	[Assign Code]	Medium Profile
[Assign Code]	[Assign Code]	Large Profile
[Assign Code]	[Assign Code]	Heavy-Duty Variant



Ankle Clamp (Hybrid Distal Tibia / Hindfoot Clamp)

101

Primary Use : Stabilizes distal tibial and calcaneal segments cleanly.
Material : Anodized Aluminum & SS 316L • **Spec:** Specialized ankle clamping block; accepts 4.0–5.0 mm pins

TITANIUM / CARBON (Prod. Code)	SS. 316L (Prod. Code)	SPECIFICATION (Diameter / Length)
[Assign Code]	[Assign Code]	Standard Size
[Assign Code]	[Assign Code]	Medium Profile
[Assign Code]	[Assign Code]	Large Profile
[Assign Code]	[Assign Code]	Heavy-Duty Variant

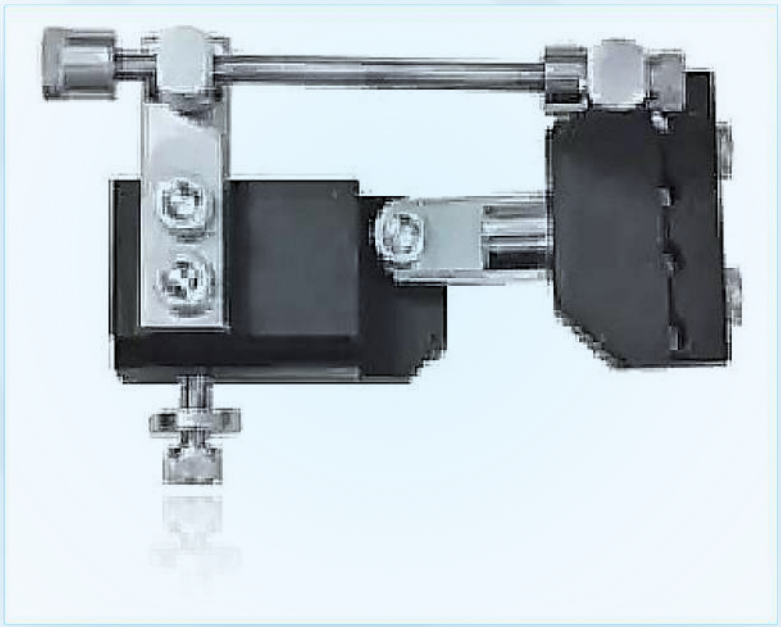

Ball-Joint & T-Ball-Joint Coupling Clamps (Modular Hybrid)

102

Primary Use : Corrects residual varus/valgus malalignment without replacing pins.
Material : Anodized Aluminum & SS 316L • **Spec:** Articulating ball-joint & T-ball coupling for LRS/tubular hybrid frames

TITANIUM / CARBON (Prod. Code)	SS. 316L (Prod. Code)	SPECIFICATION (Diameter / Length)
[Assign Code]	[Assign Code]	Standard Size
[Assign Code]	[Assign Code]	Medium Profile
[Assign Code]	[Assign Code]	Large Profile
[Assign Code]	[Assign Code]	Heavy-Duty Variant

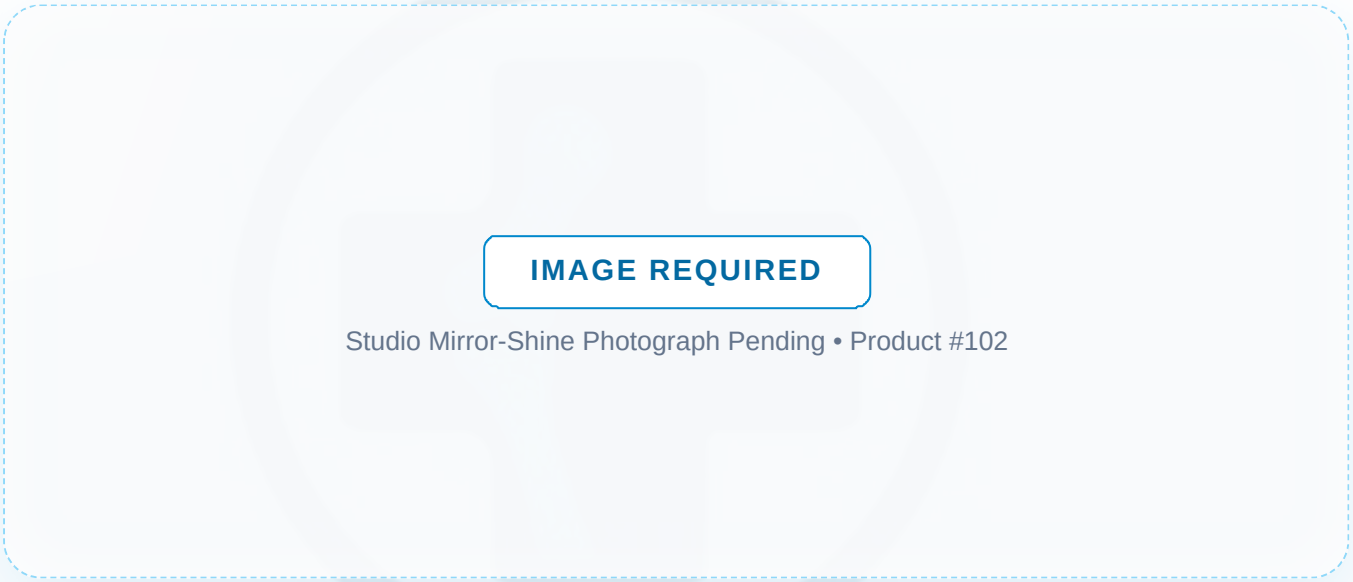

Rancho Cube / Block for Half-Pin (1-Hole to 5-Hole, Male & Female)

Primary Use : Core component for hybrid circular frames on tibia and femur.
Material : Stainless Steel 316L • **Spec:** 1, 2, 3, 4, 5-hole cubes; accepts Ø 5.0–6.0 mm Schanz pins + set screw

TITANIUM / CARBON (Prod. Code)	SS. 316L (Prod. Code)	SPECIFICATION (Diameter / Length)
[Assign Code]	[Assign Code]	Standard Size
[Assign Code]	[Assign Code]	Medium Profile
[Assign Code]	[Assign Code]	Large Profile
[Assign Code]	[Assign Code]	Heavy-Duty Variant

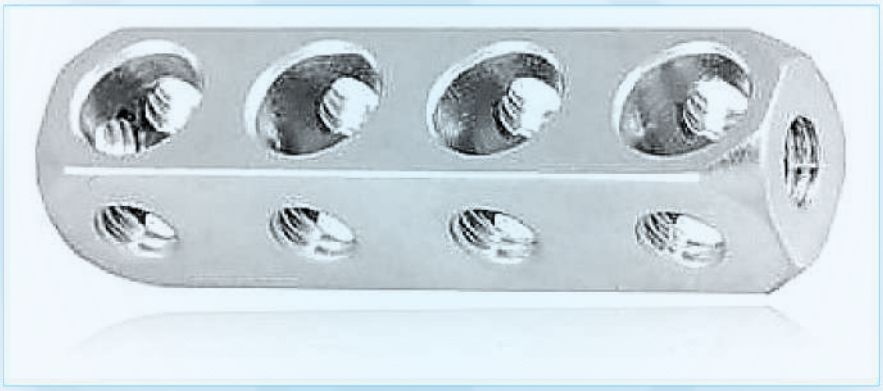

Multipin Fixation Clamp & Single-Pin Fixation Bolt (Ring Mount)

104

Primary Use : Enhances hybrid ring-to-bone stiffness with minimal profile.
Material : Stainless Steel 316L • **Spec:** Clamps 1–3 Schanz pins directly onto circular ring perimeter

TITANIUM / CARBON (Prod. Code)	SS. 316L (Prod. Code)	SPECIFICATION (Diameter / Length)
[Assign Code]	[Assign Code]	Standard Size
[Assign Code]	[Assign Code]	Medium Profile
[Assign Code]	[Assign Code]	Large Profile
[Assign Code]	[Assign Code]	Heavy-Duty Variant

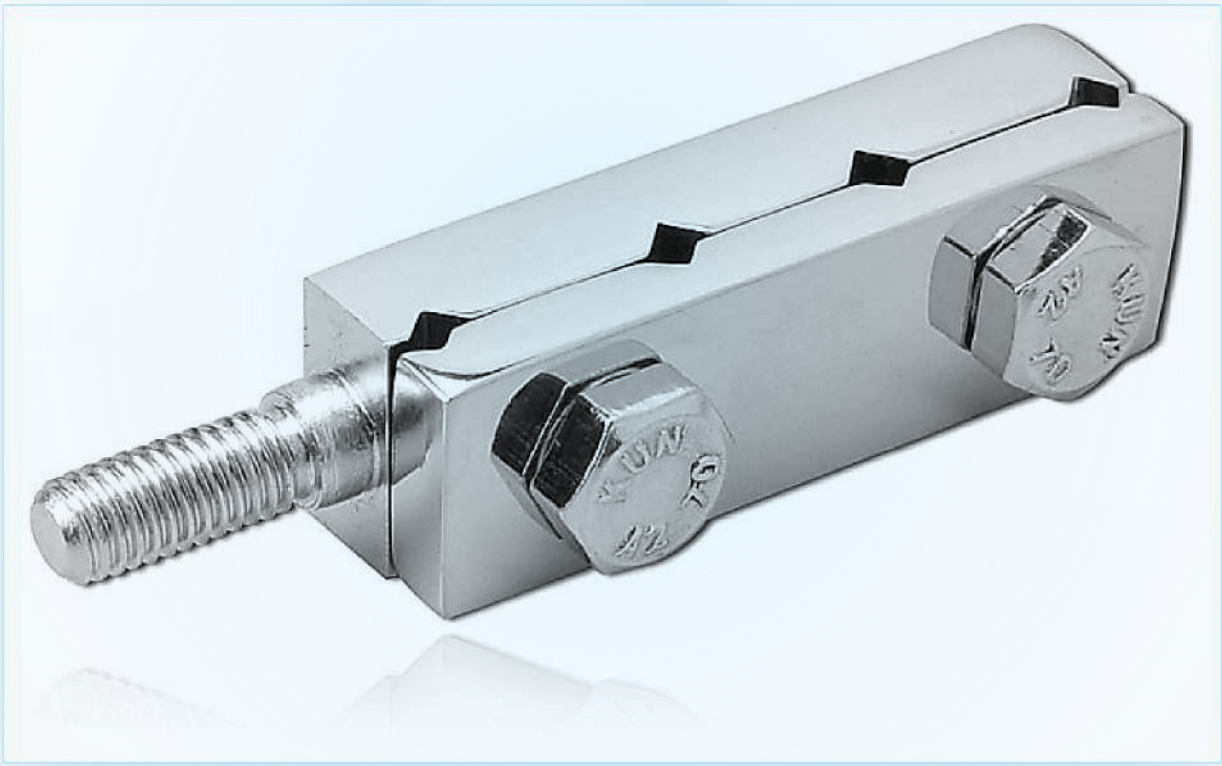

Universal Wire Fixation Bolt & Cannulated Female-Head Bolt

105

Primary Use : Prevents wire slippage during multi-month weight-bearing.
Material : Stainless Steel 316L • **Spec:** M6 universal wire bolt + female-threaded cannulated head bolt

TITANIUM / CARBON (Prod. Code)	SS. 316L (Prod. Code)	SPECIFICATION (Diameter / Length)
[Assign Code]	[Assign Code]	Standard Size
[Assign Code]	[Assign Code]	Medium Profile
[Assign Code]	[Assign Code]	Large Profile
[Assign Code]	[Assign Code]	Heavy-Duty Variant

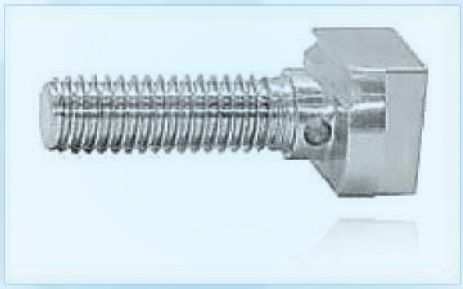

Conical Washer Couple (Angular Ring-Strut Alignment)

106

Primary Use : Eliminates rod thread binding during progressive deformity correction.
Material : Stainless Steel 316L • **Spec:** Matched convex/concave M6 spherical washer pair (±10° tilt)

TITANIUM / CARBON (Prod. Code)	SS. 316L (Prod. Code)	SPECIFICATION (Diameter / Length)
[Assign Code]	[Assign Code]	Standard Size
[Assign Code]	[Assign Code]	Medium Profile
[Assign Code]	[Assign Code]	Large Profile
[Assign Code]	[Assign Code]	Heavy-Duty Variant

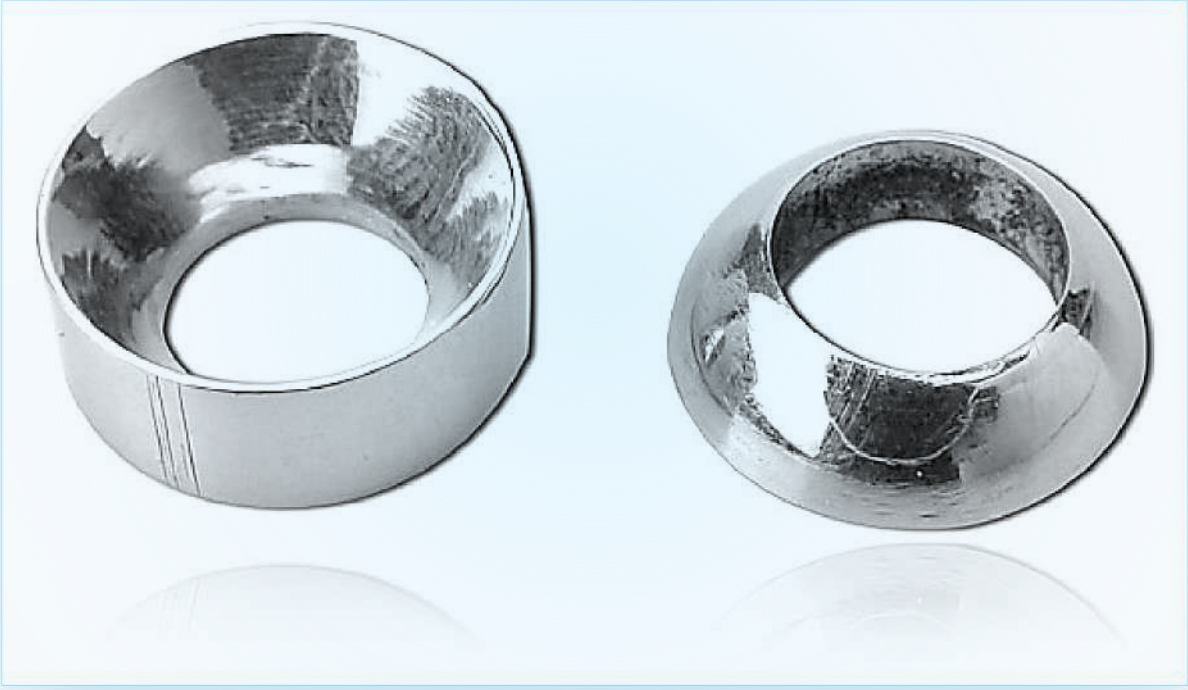

Threaded Socket, Bushing & Connection Bolt (M6 Ilizarov Hardware)

Primary Use : Essential precision hardware for every Ilizarov assembly tray.
Material : Stainless Steel 316L • **Spec:** M6 hexagonal threaded sockets (20–60 mm), bushings & M6 bolts

TITANIUM / CARBON (Prod. Code)	SS. 316L (Prod. Code)	SPECIFICATION (Diameter / Length)
[Assign Code]	[Assign Code]	Standard Size
[Assign Code]	[Assign Code]	Medium Profile
[Assign Code]	[Assign Code]	Large Profile
[Assign Code]	[Assign Code]	Heavy-Duty Variant

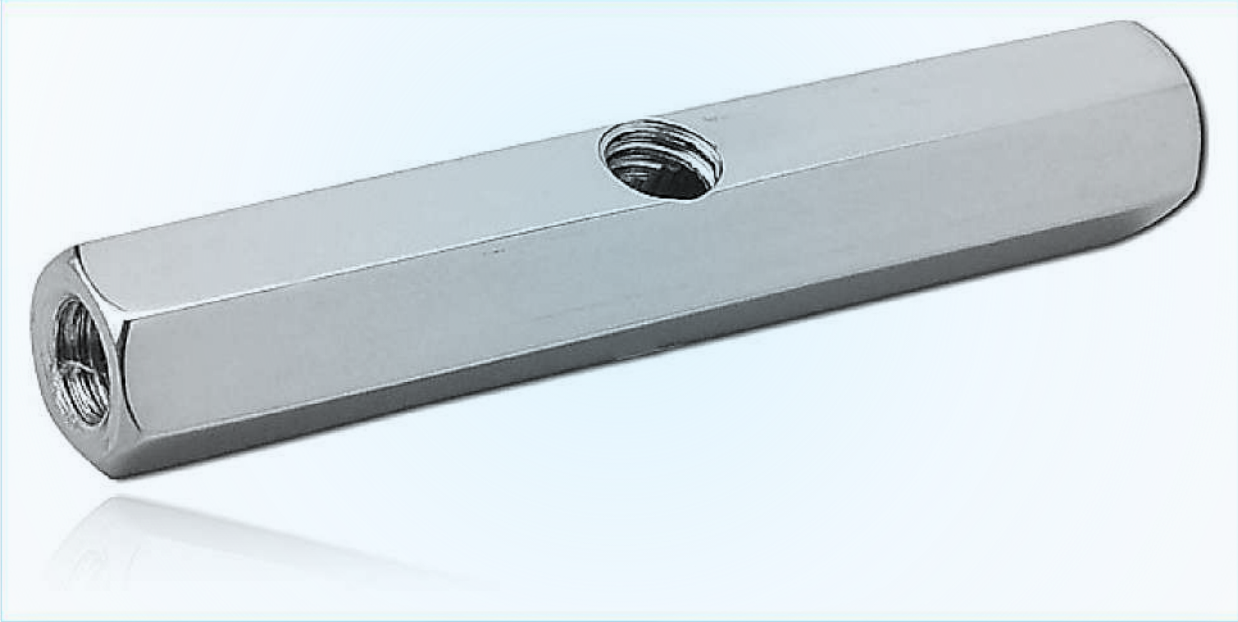

Ilizarov 10 mm Hex Nuts, Square Nuts, Nylon Lock Nuts & SOSI Open Nut

108

Primary Use : Guarantees zero frame loosening throughout the consolidation phase.
Material : Stainless Steel 316L • **Spec:** M6 standard 10 mm hex, square, nyloc anti-vibration & 14 mm SOSI open nut

TITANIUM / CARBON (Prod. Code)	SS. 316L (Prod. Code)	SPECIFICATION (Diameter / Length)
[Assign Code]	[Assign Code]	Standard Size
[Assign Code]	[Assign Code]	Medium Profile
[Assign Code]	[Assign Code]	Large Profile
[Assign Code]	[Assign Code]	Heavy-Duty Variant

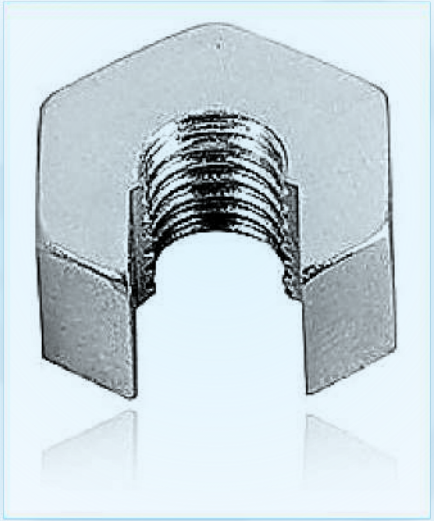

Hybrid Female Rod — 100 mm (Ring-to-Tube Transition)

109

Primary Use : Adjustable standoff strut linking Ilizarov rings to tubular bars.
Material : SS 316L / Anodized Aluminum • **Spec:** Length 100 mm; M6 female/tube interface

TITANIUM / CARBON (Prod. Code)	SS. 316L (Prod. Code)	SPECIFICATION (Diameter / Length)
[Assign Code]	[Assign Code]	Standard Size
[Assign Code]	[Assign Code]	Medium Profile
[Assign Code]	[Assign Code]	Large Profile
[Assign Code]	[Assign Code]	Heavy-Duty Variant



Hybrid End Rod — 75 mm (Compact Transition Strut)

110

Primary Use : Short standoff transition rod for periarticular hybrid constructs.
Material : SS 316L / Anodized Aluminum • **Spec:** Length 75 mm; M6/tube interface

TITANIUM / CARBON (Prod. Code)	SS. 316L (Prod. Code)	SPECIFICATION (Diameter / Length)
[Assign Code]	[Assign Code]	Standard Size
[Assign Code]	[Assign Code]	Medium Profile
[Assign Code]	[Assign Code]	Large Profile
[Assign Code]	[Assign Code]	Heavy-Duty Variant

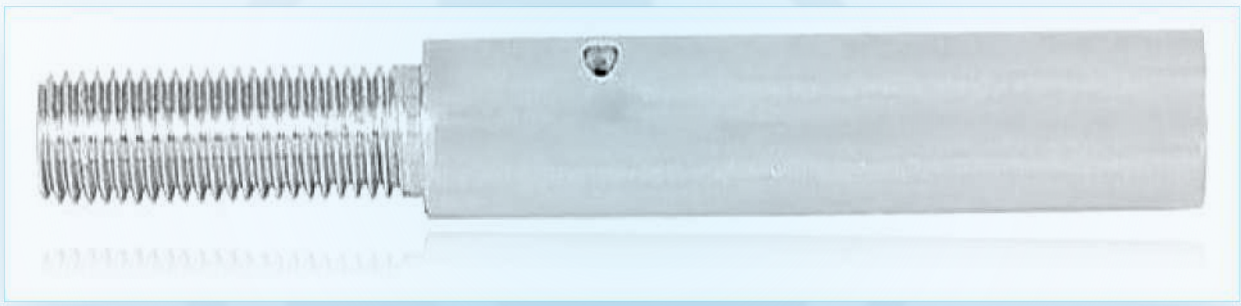

Ilizarov Connection Bolt & Square/Hex/Nyloc Nuts

111

Primary Use : Vibration-proof stainless hardware for circular frame assembly.
Material : SS 316L / Anodized Aluminum • **Spec:** M6 × 12–25 mm bolts + 10 mm hex & nyloc nuts

TITANIUM / CARBON (Prod. Code)	SS. 316L (Prod. Code)	SPECIFICATION (Diameter / Length)
[Assign Code]	[Assign Code]	Standard Size
[Assign Code]	[Assign Code]	Medium Profile
[Assign Code]	[Assign Code]	Large Profile
[Assign Code]	[Assign Code]	Heavy-Duty Variant

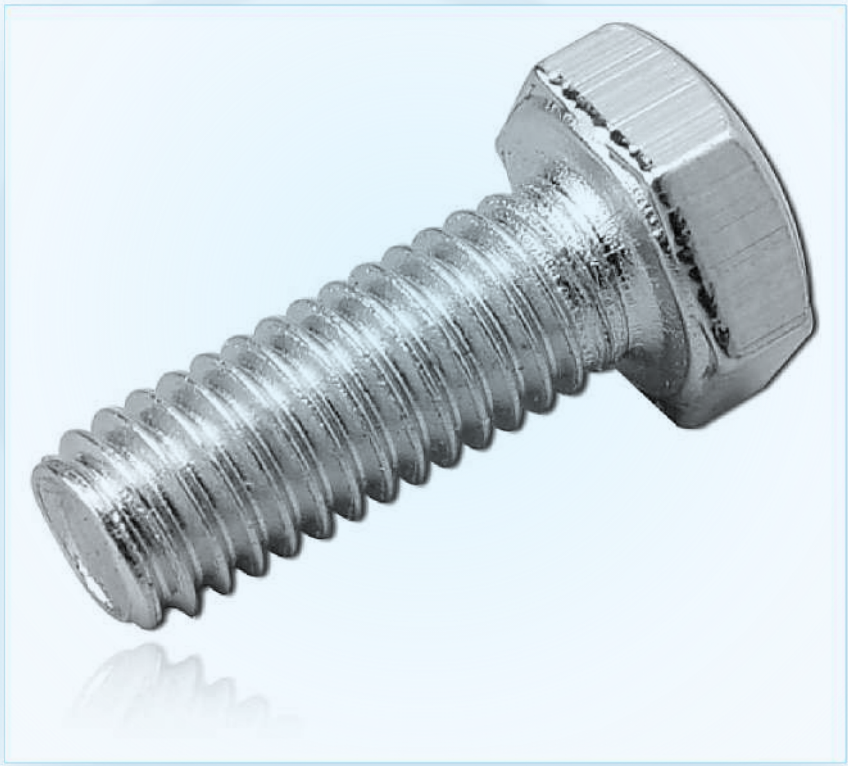

Cannulated Wire Bolt with Female-Threaded Head

112

Primary Use : Anchors Ø 1.5–2.0 mm Ilizarov wires cleanly under high tension.
Material : SS 316L / Anodized Aluminum • **Spec:** M6 cannulated bore + female head thread

TITANIUM / CARBON (Prod. Code)	SS. 316L (Prod. Code)	SPECIFICATION (Diameter / Length)
[Assign Code]	[Assign Code]	Standard Size
[Assign Code]	[Assign Code]	Medium Profile
[Assign Code]	[Assign Code]	Large Profile
[Assign Code]	[Assign Code]	Heavy-Duty Variant

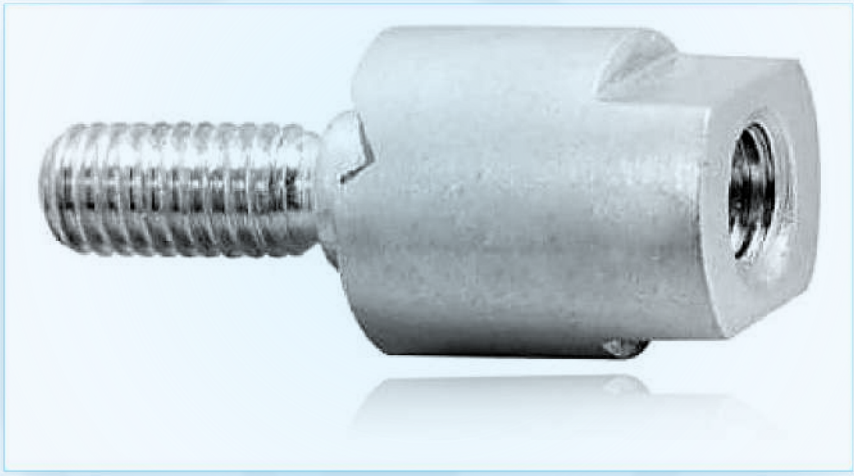

Kirschner Wire (K-Wire) — Double Trocar Point (0.8 mm – 1.2 mm)

113

Primary Use : Percutaneous pinning of phalanges, metacarpals, and small carpal fragments.
Material : SS 316L (ASTM F138) & Ti-6Al-4V ELI (ASTM F136) • **Spec:** Ø 0.8, 1.0, 1.2 mm; lengths 80, 100, 125, 150, 200 mm

TITANIUM / CARBON (Prod. Code)	SS. 316L (Prod. Code)	SPECIFICATION (Diameter / Length)
[Assign Code]	[Assign Code]	Ø 1.0 mm × 150 mm
[Assign Code]	[Assign Code]	Ø 1.2 mm × 150 mm
[Assign Code]	[Assign Code]	Ø 1.5 mm × 200 mm
[Assign Code]	[Assign Code]	Ø 1.8 mm × 200 mm
[Assign Code]	[Assign Code]	Ø 2.0 mm × 250 mm

IMAGE REQUIRED

Studio Mirror-Shine Photograph Pending • Product #113

Kirschner Wire (K-Wire) — Double Trocar Point (1.4 mm – 1.8 mm)

114

Primary Use : Primary pediatric supracondylar humerus, distal radius, and ankle pinning.
Material : SS 316L (ASTM F138) & Ti-6Al-4V ELI (ASTM F136) • **Spec:** Ø 1.4, 1.5, 1.6, 1.8 mm; lengths 150, 200, 250, 300 mm

TITANIUM / CARBON (Prod. Code)	SS. 316L (Prod. Code)	SPECIFICATION (Diameter / Length)
[Assign Code]	[Assign Code]	Ø 1.0 mm × 150 mm
[Assign Code]	[Assign Code]	Ø 1.2 mm × 150 mm
[Assign Code]	[Assign Code]	Ø 1.5 mm × 200 mm
[Assign Code]	[Assign Code]	Ø 1.8 mm × 200 mm
[Assign Code]	[Assign Code]	Ø 2.0 mm × 250 mm

IMAGE REQUIRED

Studio Mirror-Shine Photograph Pending • Product #114

Kirschner Wire (K-Wire) — Double Trocar Point (2.0 mm – 2.5 mm)

115

Primary Use : Divergent pinning of metaphyseal fractures, patella/olecranon tension banding.
Material : SS 316L (ASTM F138) & Ti-6Al-4V ELI (ASTM F136) • **Spec:** Ø 2.0, 2.2, 2.3, 2.5 mm; lengths 150, 200, 250, 300 mm

TITANIUM / CARBON (Prod. Code)	SS. 316L (Prod. Code)	SPECIFICATION (Diameter / Length)
[Assign Code]	[Assign Code]	150 mm Length
[Assign Code]	[Assign Code]	200 mm Length
[Assign Code]	[Assign Code]	250 mm Length
[Assign Code]	[Assign Code]	300 mm Length

IMAGE REQUIRED

Studio Mirror-Shine Photograph Pending • Product #115

Kirschner Wire (K-Wire) — Double Trocar Point (3.0 mm – 4.0 mm)

116

Primary Use : Temporary pelvic/femoral stabilization and large-fragment reduction joystick.
Material : SS 316L (ASTM F138) & Ti-6Al-4V ELI (ASTM F136) • **Spec:** Ø 3.0, 3.2, 3.5, 4.0 mm; lengths 200, 250, 300 mm

TITANIUM / CARBON (Prod. Code)	SS. 316L (Prod. Code)	SPECIFICATION (Diameter / Length)
[Assign Code]	[Assign Code]	Ø 4.0 mm × 150 mm
[Assign Code]	[Assign Code]	Ø 4.5 mm × 175 mm
[Assign Code]	[Assign Code]	Ø 5.0 mm × 200 mm
[Assign Code]	[Assign Code]	Ø 6.0 mm × 250 mm

IMAGE REQUIRED

Studio Mirror-Shine Photograph Pending • Product #116

Kirschner Wire (K-Wire) — Single Trocar Point (0.8 mm – 1.6 mm)

117

Primary Use : Controlled antegrade insertion with reduced glove-puncture hazard at trailing end.
Material : SS 316L (ASTM F138) & Ti-6Al-4V ELI (ASTM F136) • **Spec:** Ø 0.8, 1.0, 1.2, 1.4, 1.5, 1.6 mm; lengths 100 – 250 mm

TITANIUM / CARBON (Prod. Code)	SS. 316L (Prod. Code)	SPECIFICATION (Diameter / Length)
[Assign Code]	[Assign Code]	Ø 1.0 mm × 150 mm
[Assign Code]	[Assign Code]	Ø 1.2 mm × 150 mm
[Assign Code]	[Assign Code]	Ø 1.5 mm × 200 mm
[Assign Code]	[Assign Code]	Ø 1.8 mm × 200 mm
[Assign Code]	[Assign Code]	Ø 2.0 mm × 250 mm

IMAGE REQUIRED

Studio Mirror-Shine Photograph Pending • Product #117

Kirschner Wire (K-Wire) — Single Trocar Point (1.8 mm – 3.0 mm)

118

Primary Use : Ideal for open reduction provisional fixation and tension-band anchor pins.
Material : SS 316L (ASTM F138) & Ti-6Al-4V ELI (ASTM F136) • **Spec:** Ø 1.8, 2.0, 2.5, 3.0 mm; lengths 150 – 300 mm

TITANIUM / CARBON (Prod. Code)	SS. 316L (Prod. Code)	SPECIFICATION (Diameter / Length)
[Assign Code]	[Assign Code]	150 mm Length
[Assign Code]	[Assign Code]	200 mm Length
[Assign Code]	[Assign Code]	250 mm Length
[Assign Code]	[Assign Code]	300 mm Length

IMAGE REQUIRED

Studio Mirror-Shine Photograph Pending • Product #118

Kirschner Wire (K-Wire) — Single Threaded Trocar (1.0 mm – 1.8 mm)

119

Primary Use : Prevents pin migration in distal radius, clavicle, and hand osteosynthesis.
Material : SS 316L (ASTM F138) & Ti-6Al-4V ELI (ASTM F136) • **Spec:** Ø 1.0, 1.2, 1.4, 1.5, 1.6, 1.8 mm; lengths 150, 200, 300 mm

TITANIUM / CARBON (Prod. Code)	SS. 316L (Prod. Code)	SPECIFICATION (Diameter / Length)
[Assign Code]	[Assign Code]	Ø 1.0 mm × 150 mm
[Assign Code]	[Assign Code]	Ø 1.2 mm × 150 mm
[Assign Code]	[Assign Code]	Ø 1.5 mm × 200 mm
[Assign Code]	[Assign Code]	Ø 1.8 mm × 200 mm
[Assign Code]	[Assign Code]	Ø 2.0 mm × 250 mm

IMAGE REQUIRED

Studio Mirror-Shine Photograph Pending • Product #119

Kirschner Wire (K-Wire) — Single Threaded Trocar (2.0 mm – 3.0 mm)

120

Primary Use : High pull-out resistance in osteoporotic metaphyseal and acromioclavicular pinning.
Material : SS 316L (ASTM F138) & Ti-6Al-4V ELI (ASTM F136) • **Spec:** Ø 2.0, 2.2, 2.5, 3.0 mm; lengths 150, 200, 250, 300 mm

TITANIUM / CARBON (Prod. Code)	SS. 316L (Prod. Code)	SPECIFICATION (Diameter / Length)
[Assign Code]	[Assign Code]	150 mm Length
[Assign Code]	[Assign Code]	200 mm Length
[Assign Code]	[Assign Code]	250 mm Length
[Assign Code]	[Assign Code]	300 mm Length

IMAGE REQUIRED

Studio Mirror-Shine Photograph Pending • Product #120

Kirschner Wire (K-Wire) — Fully Threaded (1.2 mm – 2.5 mm)

121

Primary Use : Maximum purchase across both cortices for arthrodesis and nonunion fixation.
Material : SS 316L (ASTM F138) & Ti-6Al-4V ELI (ASTM F136) • **Spec:** Ø 1.2, 1.5, 1.6, 1.8, 2.0, 2.5 mm; lengths 150 – 300 mm

TITANIUM / CARBON (Prod. Code)	SS. 316L (Prod. Code)	SPECIFICATION (Diameter / Length)
[Assign Code]	[Assign Code]	150 mm Length
[Assign Code]	[Assign Code]	200 mm Length
[Assign Code]	[Assign Code]	250 mm Length
[Assign Code]	[Assign Code]	300 mm Length

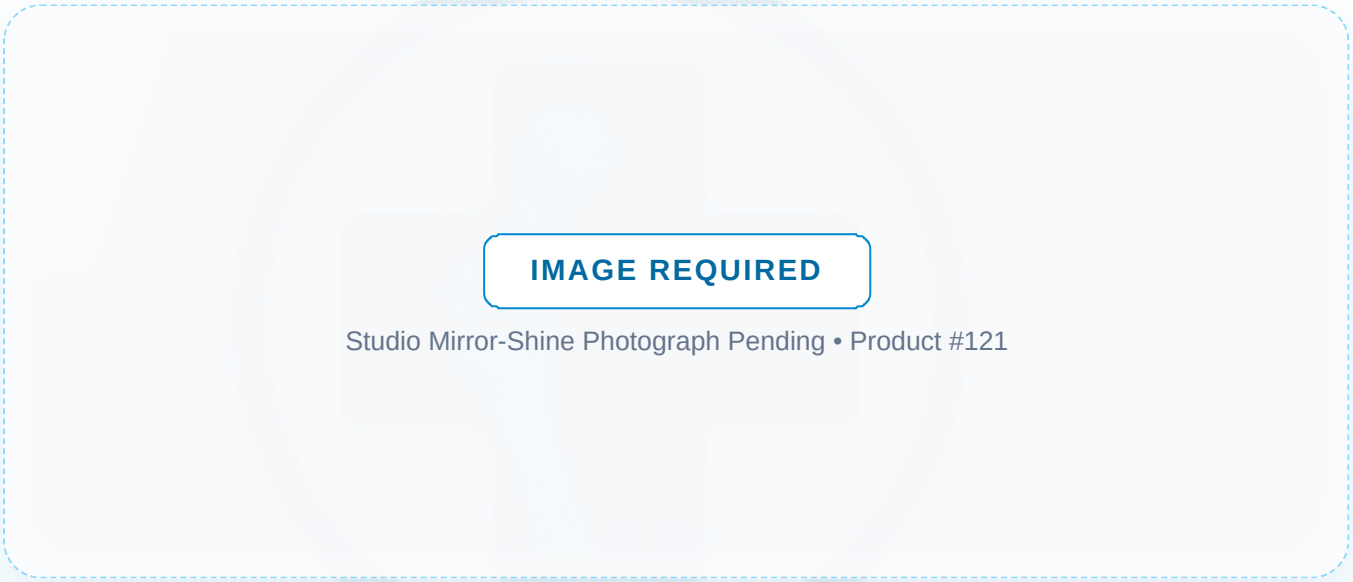

Kirschner Wire (K-Wire) — Bayonet / Diamond Point (1.2 mm – 2.0 mm)

122

Primary Use : Smooth low-heat penetration in dense cortical bone of hand, wrist, and foot.
Material : SS 316L (ASTM F138) & Ti-6Al-4V ELI (ASTM F136) • **Spec:** Ø 1.2, 1.5, 1.6, 1.8, 2.0 mm; lengths 150 – 300 mm

TITANIUM / CARBON (Prod. Code)	SS. 316L (Prod. Code)	SPECIFICATION (Diameter / Length)
[Assign Code]	[Assign Code]	150 mm Length
[Assign Code]	[Assign Code]	200 mm Length
[Assign Code]	[Assign Code]	250 mm Length
[Assign Code]	[Assign Code]	300 mm Length

IMAGE REQUIRED

Studio Mirror-Shine Photograph Pending • Product #122

Kirschner Wire (K-Wire) — Spade / Flat Cutting Tip (1.5 mm – 2.5 mm)

123

Primary Use : Accurate starting purchase on steep oblique cortical surfaces.
Material : SS 316L (ASTM F138) & Ti-6Al-4V ELI (ASTM F136) • **Spec:** Ø 1.5, 1.8, 2.0, 2.5 mm; lengths 150 – 250 mm

TITANIUM / CARBON (Prod. Code)	SS. 316L (Prod. Code)	SPECIFICATION (Diameter / Length)
[Assign Code]	[Assign Code]	150 mm Length
[Assign Code]	[Assign Code]	200 mm Length
[Assign Code]	[Assign Code]	250 mm Length
[Assign Code]	[Assign Code]	300 mm Length

IMAGE REQUIRED

Studio Mirror-Shine Photograph Pending • Product #123

Kirschner Wire (K-Wire) — Blunt / Round Tip Intramedullary (1.2 mm – 2.5 mm)

124

Primary Use : Intramedullary splinting of pediatric forearm, ulna, and clavicle fractures.
Material : SS 316L (ASTM F138) & Ti-6Al-4V ELI (ASTM F136) • **Spec:** Ø 1.2, 1.5, 1.6, 2.0, 2.5 mm; lengths 200 – 300 mm

TITANIUM / CARBON (Prod. Code)	SS. 316L (Prod. Code)	SPECIFICATION (Diameter / Length)
[Assign Code]	[Assign Code]	150 mm Length
[Assign Code]	[Assign Code]	200 mm Length
[Assign Code]	[Assign Code]	250 mm Length
[Assign Code]	[Assign Code]	300 mm Length

IMAGE REQUIRED

Studio Mirror-Shine Photograph Pending • Product #124

Kirschner Wire (K-Wire) — Eyeleted / Suture-Hole Tail (1.6 mm – 2.4 mm)

125

Primary Use : Used in arthroscopic ACL/rotator cuff tunnel suture passing and tension banding.
Material : SS 316L (ASTM F138) & Ti-6Al-4V ELI (ASTM F136) • **Spec:** Ø 1.6, 1.8, 2.0, 2.4 mm; lengths 150 – 300 mm

TITANIUM / CARBON (Prod. Code)	SS. 316L (Prod. Code)	SPECIFICATION (Diameter / Length)
[Assign Code]	[Assign Code]	150 mm Length
[Assign Code]	[Assign Code]	200 mm Length
[Assign Code]	[Assign Code]	250 mm Length
[Assign Code]	[Assign Code]	300 mm Length

IMAGE REQUIRED

Studio Mirror-Shine Photograph Pending • Product #125

Kirschner Wire (K-Wire) — Calibrated Depth-Marked (1.25 mm – 2.0 mm)

126

Primary Use : Direct intraoperative length readout without separate depth gauge.
Material : SS 316L (ASTM F138) & Ti-6Al-4V ELI (ASTM F136) • **Spec:** Ø 1.25, 1.6, 2.0 mm; lengths 150 – 250 mm; 10 mm laser graduations

TITANIUM / CARBON (Prod. Code)	SS. 316L (Prod. Code)	SPECIFICATION (Diameter / Length)
[Assign Code]	[Assign Code]	150 mm Length
[Assign Code]	[Assign Code]	200 mm Length
[Assign Code]	[Assign Code]	250 mm Length
[Assign Code]	[Assign Code]	300 mm Length

IMAGE REQUIRED

Studio Mirror-Shine Photograph Pending • Product #126

Kirschner Wire (K-Wire) — Stopper / Beaded Reduction Wire (1.6 mm – 2.0 mm)

127

Primary Use : Pulls small intra-articular fragments into anatomical alignment before plating.
Material : SS 316L (ASTM F138) & Ti-6Al-4V ELI (ASTM F136) • **Spec:** Ø 1.6, 1.8, 2.0 mm; lengths 150 – 250 mm; integral olive/bead stop

TITANIUM / CARBON (Prod. Code)	SS. 316L (Prod. Code)	SPECIFICATION (Diameter / Length)
[Assign Code]	[Assign Code]	150 mm Length
[Assign Code]	[Assign Code]	200 mm Length
[Assign Code]	[Assign Code]	250 mm Length
[Assign Code]	[Assign Code]	300 mm Length

IMAGE REQUIRED

Studio Mirror-Shine Photograph Pending • Product #127

Front-Threaded Schanz Pin — Mini Fixator (1.5 mm × 75 mm)

Primary Use : Designed for phalangeal and metacarpal mini external fixators.
Material : SS 316L (ASTM F138) & Ti-6Al-4V ELI (ASTM F136) • **Spec:** Ø 1.5 mm; total length 75 mm; 15 mm cortical thread

TITANIUM / CARBON (Prod. Code)	SS. 316L (Prod. Code)	SPECIFICATION (Diameter / Length)
[Assign Code]	[Assign Code]	150 mm Length
[Assign Code]	[Assign Code]	200 mm Length
[Assign Code]	[Assign Code]	250 mm Length
[Assign Code]	[Assign Code]	300 mm Length

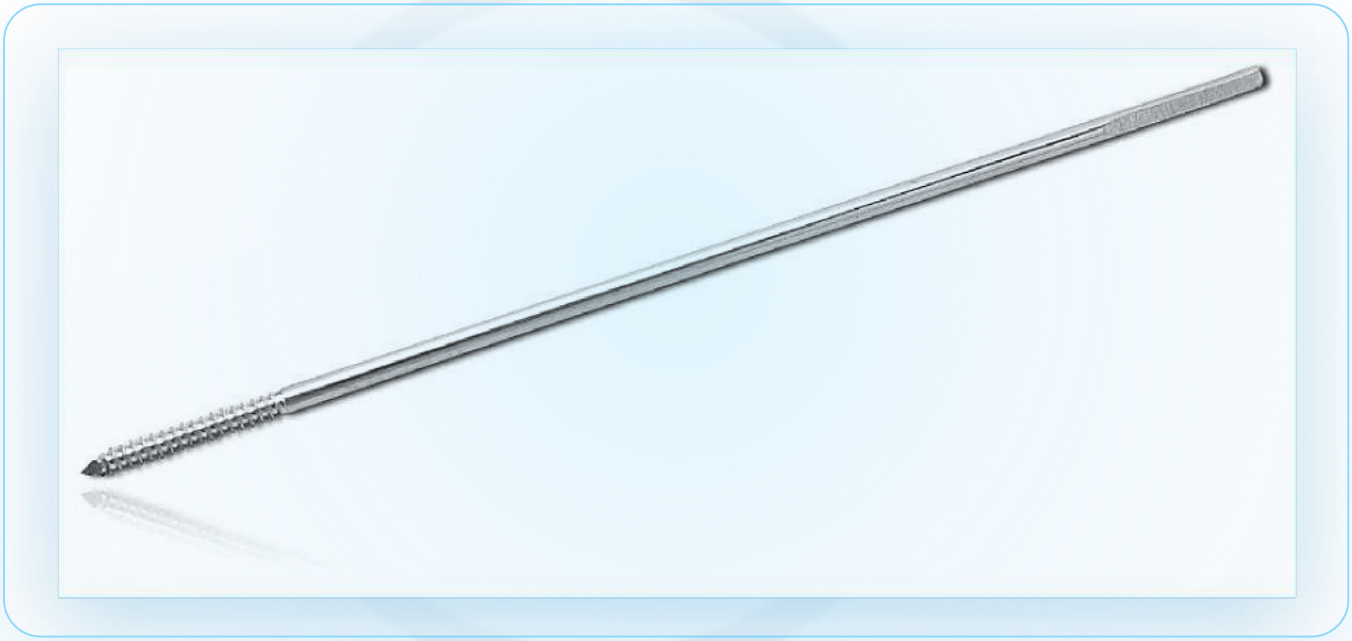

Front-Threaded Schanz Pin — Mini Fixator (2.0 mm × 75 mm)

Primary Use : Ideal for hand, thumb Bennett, and forefoot mini rail fixators.
Material : SS 316L (ASTM F138) & Ti-6Al-4V ELI (ASTM F136) • **Spec:** Ø 2.0 mm; total length 75 – 100 mm; 18 mm cortical thread

TITANIUM / CARBON (Prod. Code)	SS. 316L (Prod. Code)	SPECIFICATION (Diameter / Length)
[Assign Code]	[Assign Code]	150 mm Length
[Assign Code]	[Assign Code]	200 mm Length
[Assign Code]	[Assign Code]	250 mm Length
[Assign Code]	[Assign Code]	300 mm Length

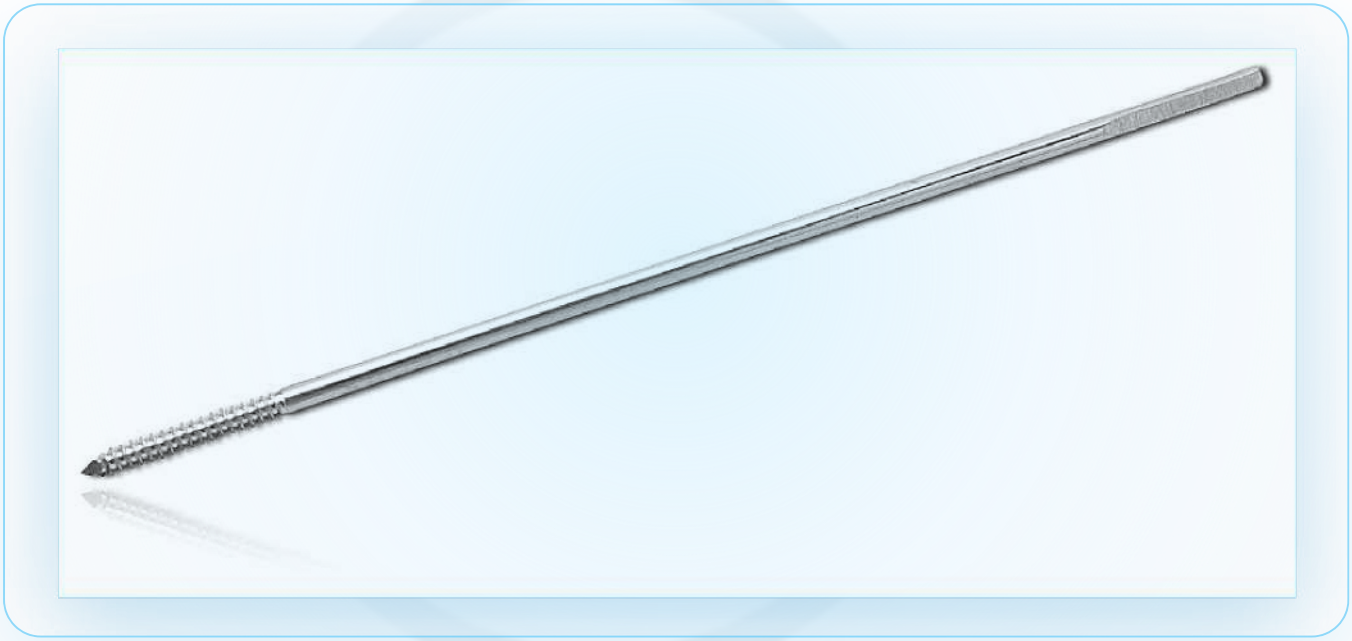

Front-Threaded Schanz Pin — Small/Wrist Fixator (2.5 mm)

130

Primary Use : Metacarpal and distal radius bridging external fixation.
Material : SS 316L (ASTM F138) & Ti-6Al-4V ELI (ASTM F136) • **Spec:** Ø 2.5 mm; lengths 80, 100, 120 mm; 20–25 mm thread

TITANIUM / CARBON (Prod. Code)	SS. 316L (Prod. Code)	SPECIFICATION (Diameter / Length)
[Assign Code]	[Assign Code]	150 mm Length
[Assign Code]	[Assign Code]	200 mm Length
[Assign Code]	[Assign Code]	250 mm Length
[Assign Code]	[Assign Code]	300 mm Length



Front-Threaded Schanz Pin — Wrist External Fixator Set (2.5 mm / 3.0 mm)

131

Primary Use : Complete pin geometry matched to dynamic and static wrist external fixators.
Material : SS 316L (ASTM F138) & Ti-6Al-4V ELI (ASTM F136) • **Spec:** Ø 2.5 mm & 3.0 mm; lengths 100 – 130 mm; 25 mm thread

TITANIUM / CARBON (Prod. Code)	SS. 316L (Prod. Code)	SPECIFICATION (Diameter / Length)
[Assign Code]	[Assign Code]	150 mm Length
[Assign Code]	[Assign Code]	200 mm Length
[Assign Code]	[Assign Code]	250 mm Length
[Assign Code]	[Assign Code]	300 mm Length



Front-Threaded Schanz Pin — Stepped Cortical (3.5 mm × 4.0 mm Shaft)

132

Primary Use : Forearm, humerus, and pediatric tibia tubular external fixation.
Material : SS 316L (ASTM F138) & Ti-6Al-4V ELI (ASTM F136) • **Spec:** Thread Ø 3.5 mm / Shaft Ø 4.0 mm; lengths 100 – 150 mm

TITANIUM / CARBON (Prod. Code)	SS. 316L (Prod. Code)	SPECIFICATION (Diameter / Length)
[Assign Code]	[Assign Code]	Ø 4.0 mm × 150 mm
[Assign Code]	[Assign Code]	Ø 4.5 mm × 175 mm
[Assign Code]	[Assign Code]	Ø 5.0 mm × 200 mm
[Assign Code]	[Assign Code]	Ø 6.0 mm × 250 mm

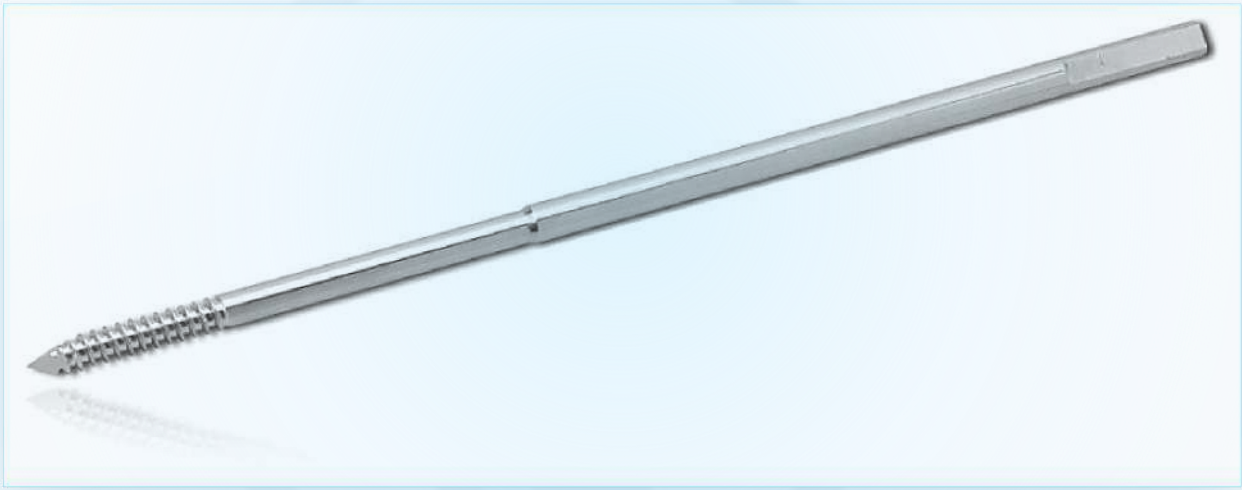

Front-Threaded Schanz Pin — Standard Cortical (4.0 mm)

Primary Use : Workhorse half-pin for forearm, distal tibia, and ankle-spanning fixators.
Material : SS 316L (ASTM F138) & Ti-6Al-4V ELI (ASTM F136) • **Spec:** Ø 4.0 mm; lengths 100, 125, 150, 175 mm; 30–40 mm cortical thread

TITANIUM / CARBON (Prod. Code)	SS. 316L (Prod. Code)	SPECIFICATION (Diameter / Length)
[Assign Code]	[Assign Code]	Ø 4.0 mm × 150 mm
[Assign Code]	[Assign Code]	Ø 4.5 mm × 175 mm
[Assign Code]	[Assign Code]	Ø 5.0 mm × 200 mm
[Assign Code]	[Assign Code]	Ø 6.0 mm × 250 mm



Front-Threaded Schanz Pin — Large Cortical (5.0 mm)

Primary Use : Primary adult tibial, femoral, and pelvic external fixator half-pin.
Material : SS 316L (ASTM F138) & Ti-6Al-4V ELI (ASTM F136) • **Spec:** Ø 5.0 mm; lengths 150, 175, 200, 225, 250 mm; 40–50 mm thread

TITANIUM / CARBON (Prod. Code)	SS. 316L (Prod. Code)	SPECIFICATION (Diameter / Length)
[Assign Code]	[Assign Code]	Ø 4.0 mm × 150 mm
[Assign Code]	[Assign Code]	Ø 4.5 mm × 175 mm
[Assign Code]	[Assign Code]	Ø 5.0 mm × 200 mm
[Assign Code]	[Assign Code]	Ø 6.0 mm × 250 mm



Front-Threaded Schanz Pin — Heavy Cortical (6.0 mm)

Primary Use : Maximizes frame rigidity in femoral lengthening and bone transport.
Material : SS 316L (ASTM F138) & Ti-6Al-4V ELI (ASTM F136) • **Spec:** Ø 6.0 mm; lengths 175, 200, 225, 250, 300 mm; 50–60 mm thread

TITANIUM / CARBON (Prod. Code)	SS. 316L (Prod. Code)	SPECIFICATION (Diameter / Length)
[Assign Code]	[Assign Code]	Ø 4.0 mm × 150 mm
[Assign Code]	[Assign Code]	Ø 4.5 mm × 175 mm
[Assign Code]	[Assign Code]	Ø 5.0 mm × 200 mm
[Assign Code]	[Assign Code]	Ø 6.0 mm × 250 mm



Front-Threaded Schanz Pin — Flat Self-Cut AO End Set (4.0 mm – 6.0 mm)

136

Primary Use : Anti-slip positive torque transfer with manual T-handles and power chucks.
Material : SS 316L (ASTM F138) & Ti-6Al-4V ELI (ASTM F136) • **Spec:** Ø 4.0, 4.5, 5.0, 6.0 mm; lengths 125 – 250 mm

TITANIUM / CARBON (Prod. Code)	SS. 316L (Prod. Code)	SPECIFICATION (Diameter / Length)
[Assign Code]	[Assign Code]	Ø 4.0 mm × 150 mm
[Assign Code]	[Assign Code]	Ø 4.5 mm × 175 mm
[Assign Code]	[Assign Code]	Ø 5.0 mm × 200 mm
[Assign Code]	[Assign Code]	Ø 6.0 mm × 250 mm



Cancellous Front-Threaded Schanz Pin (6.5 mm Dia.)

Primary Use : Indicated for proximal tibia, distal femur, and pelvic iliac crest fixation.
Material : SS 316L (ASTM F138) & Ti-6Al-4V ELI (ASTM F136) • **Spec:** Thread Ø 6.5 mm / Shaft Ø 5.0 or 6.0 mm; lengths 150 – 250 mm

TITANIUM / CARBON (Prod. Code)	SS. 316L (Prod. Code)	SPECIFICATION (Diameter / Length)
[Assign Code]	[Assign Code]	Ø 4.0 mm × 150 mm
[Assign Code]	[Assign Code]	Ø 4.5 mm × 175 mm
[Assign Code]	[Assign Code]	Ø 5.0 mm × 200 mm
[Assign Code]	[Assign Code]	Ø 6.0 mm × 250 mm



Tapered Threaded Cortical Pin — 6.0 mm Tapered 6.0 to 5.0 mm (Plain)

Primary Use : Eliminates pin-bone micro-motion in LRS rail and monolateral frames.
Material : SS 316L (ASTM F138) & Ti-6Al-4V ELI (ASTM F136) • **Spec:** Shaft Ø 6.0 mm; tapered thread 6.0 → 5.0 mm; lengths 150 – 250 mm

TITANIUM / CARBON (Prod. Code)	SS. 316L (Prod. Code)	SPECIFICATION (Diameter / Length)
[Assign Code]	[Assign Code]	Ø 4.0 mm × 150 mm
[Assign Code]	[Assign Code]	Ø 4.5 mm × 175 mm
[Assign Code]	[Assign Code]	Ø 5.0 mm × 200 mm
[Assign Code]	[Assign Code]	Ø 6.0 mm × 250 mm



Tapered Threaded Cortical Pin — 6.0 to 5.0 mm (Hydroxyapatite Coated, Sterile)

139

Primary Use : Promotes direct osseointegration and drastically reduces late pin loosening.
Material : SS 316L (ASTM F138) & Ti-6Al-4V ELI (ASTM F136) • **Spec:** Shaft Ø 6.0 mm; tapered 6.0 → 5.0 mm; lengths 150 – 250 mm; HA-coated

TITANIUM / CARBON (Prod. Code)	SS. 316L (Prod. Code)	SPECIFICATION (Diameter / Length)
[Assign Code]	[Assign Code]	Ø 4.0 mm × 150 mm
[Assign Code]	[Assign Code]	Ø 4.5 mm × 175 mm
[Assign Code]	[Assign Code]	Ø 5.0 mm × 200 mm
[Assign Code]	[Assign Code]	Ø 6.0 mm × 250 mm



Ilizarov Smooth Wire — Trocar Point (1.5 mm & 1.8 mm)

140

Primary Use : Standard transfixation wire for circular Ilizarov rings in metaphyseal bone.
Material : SS 316L (ASTM F138) & Ti-6Al-4V ELI (ASTM F136) • **Spec:** Ø 1.5 mm & 1.8 mm; lengths 300, 350, 400 mm

TITANIUM / CARBON (Prod. Code)	SS. 316L (Prod. Code)	SPECIFICATION (Diameter / Length)
[Assign Code]	[Assign Code]	150 mm Length
[Assign Code]	[Assign Code]	200 mm Length
[Assign Code]	[Assign Code]	250 mm Length
[Assign Code]	[Assign Code]	300 mm Length

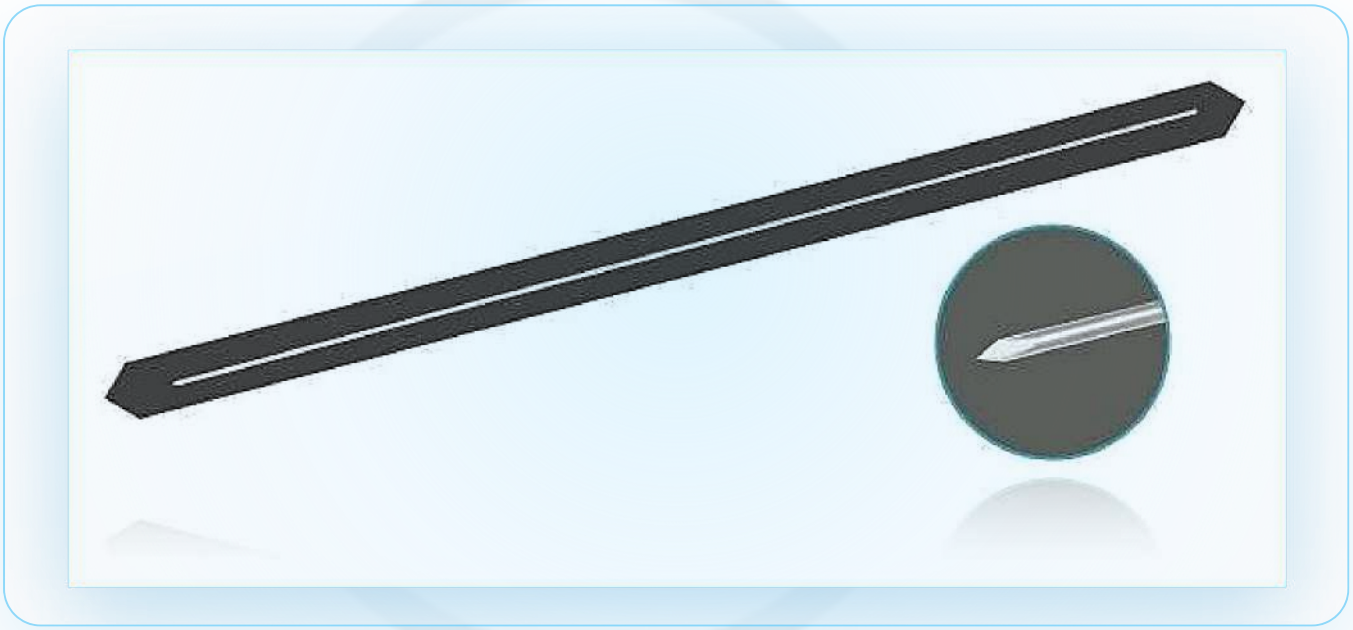

Ilizarov Smooth Wire — Bayonet Point (1.5 mm & 1.8 mm)

141

Primary Use : Preferred wire for dense tibial and femoral diaphyseal ring fixation.
Material : SS 316L (ASTM F138) & Ti-6Al-4V ELI (ASTM F136) • **Spec:** Ø 1.5 mm & 1.8 mm; lengths 300, 350, 400 mm

TITANIUM / CARBON (Prod. Code)	SS. 316L (Prod. Code)	SPECIFICATION (Diameter / Length)
[Assign Code]	[Assign Code]	150 mm Length
[Assign Code]	[Assign Code]	200 mm Length
[Assign Code]	[Assign Code]	250 mm Length
[Assign Code]	[Assign Code]	300 mm Length

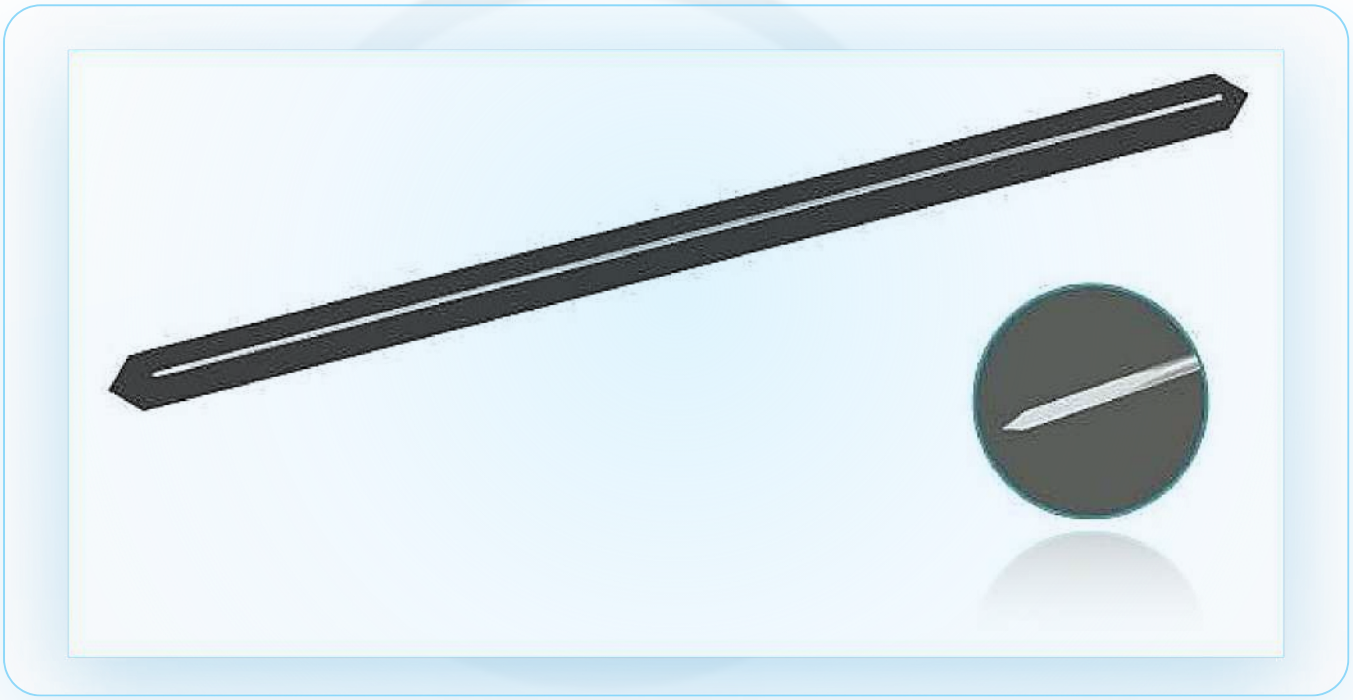

Olive Wire — Trocar Point (Standard Swaged Olive, 1.5 mm & 1.8 mm)

142

Primary Use : Provides interfragmentary compression and prevents bone sliding along wire.
Material : SS 316L (ASTM F138) & Ti-6Al-4V ELI (ASTM F136) • **Spec:** Ø 1.5 mm & 1.8 mm; lengths 300, 350, 400 mm; 4.0 mm olive bead

TITANIUM / CARBON (Prod. Code)	SS. 316L (Prod. Code)	SPECIFICATION (Diameter / Length)
[Assign Code]	[Assign Code]	Ø 4.0 mm × 150 mm
[Assign Code]	[Assign Code]	Ø 4.5 mm × 175 mm
[Assign Code]	[Assign Code]	Ø 5.0 mm × 200 mm
[Assign Code]	[Assign Code]	Ø 6.0 mm × 250 mm

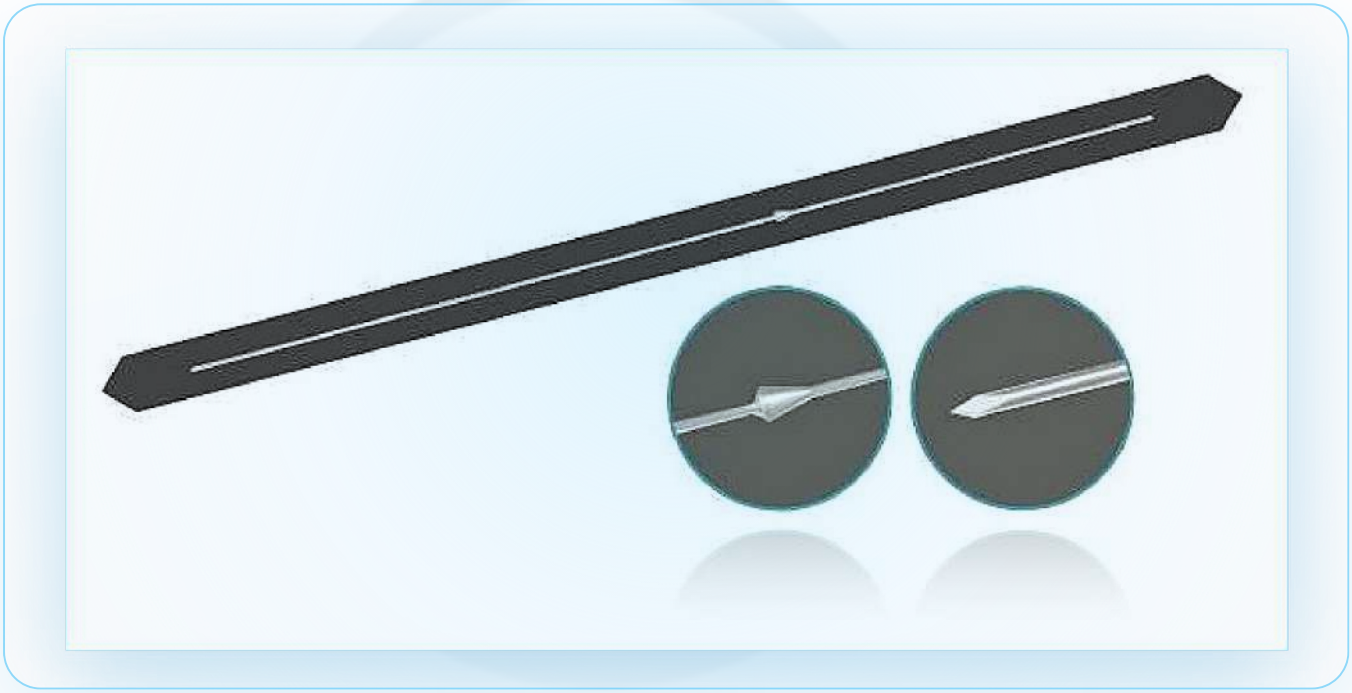

Olive Wire — Bayonet Point (Standard Swaged Olive, 1.5 mm & 1.8 mm)

Primary Use : Reduces thermal necrosis while delivering opposing shear stability on rings.
Material : SS 316L (ASTM F138) & Ti-6Al-4V ELI (ASTM F136) • **Spec:** Ø 1.5 mm & 1.8 mm; lengths 300, 350, 400 mm; 4.0 mm olive bead

TITANIUM / CARBON (Prod. Code)	SS. 316L (Prod. Code)	SPECIFICATION (Diameter / Length)
[Assign Code]	[Assign Code]	Ø 4.0 mm × 150 mm
[Assign Code]	[Assign Code]	Ø 4.5 mm × 175 mm
[Assign Code]	[Assign Code]	Ø 5.0 mm × 200 mm
[Assign Code]	[Assign Code]	Ø 6.0 mm × 250 mm

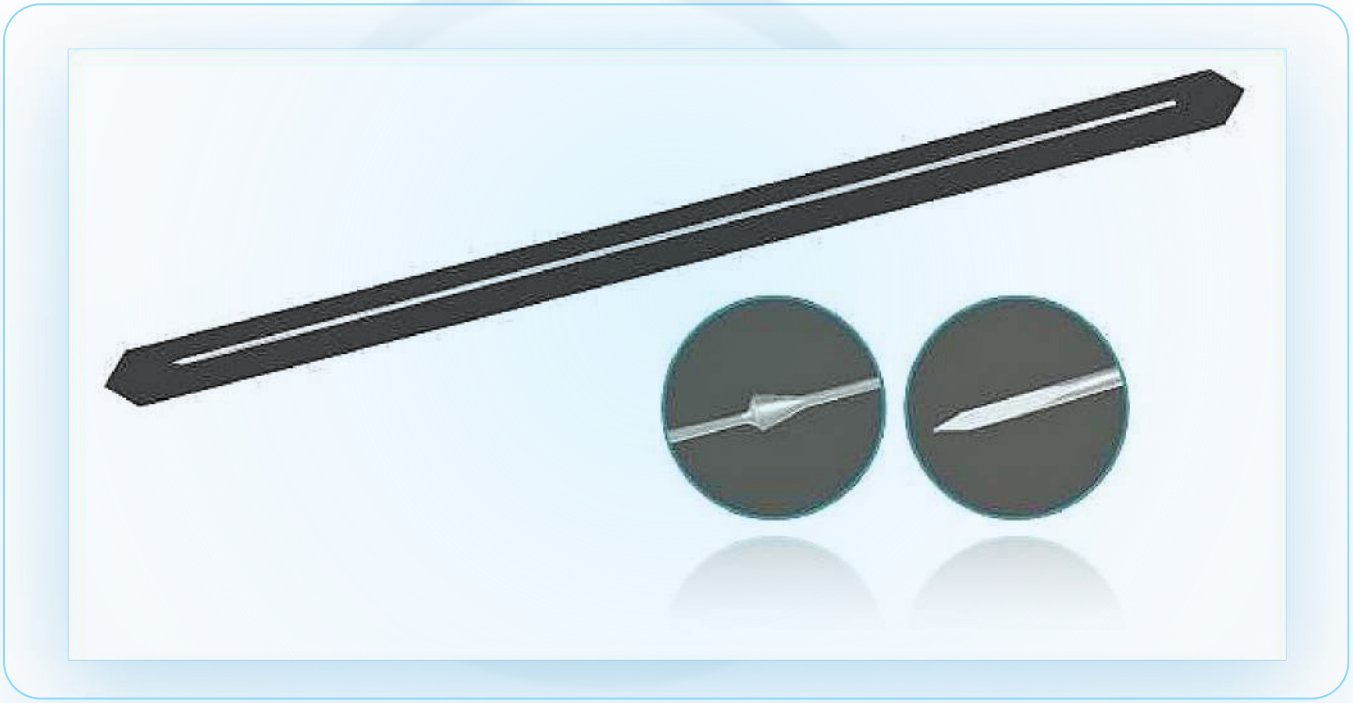

Olive Wire — Trocar Point (Single-Piece Integral Olive, 1.8 mm)

144

Primary Use : Maximum security for high-load tibial plateau, pilon, and deformity correction.
Material : SS 316L (ASTM F138) & Ti-6Al-4V ELI (ASTM F136) • **Spec:** Ø 1.8 mm; lengths 350, 400 mm; integral machined single-piece olive

TITANIUM / CARBON (Prod. Code)	SS. 316L (Prod. Code)	SPECIFICATION (Diameter / Length)
[Assign Code]	[Assign Code]	150 mm Length
[Assign Code]	[Assign Code]	200 mm Length
[Assign Code]	[Assign Code]	250 mm Length
[Assign Code]	[Assign Code]	300 mm Length

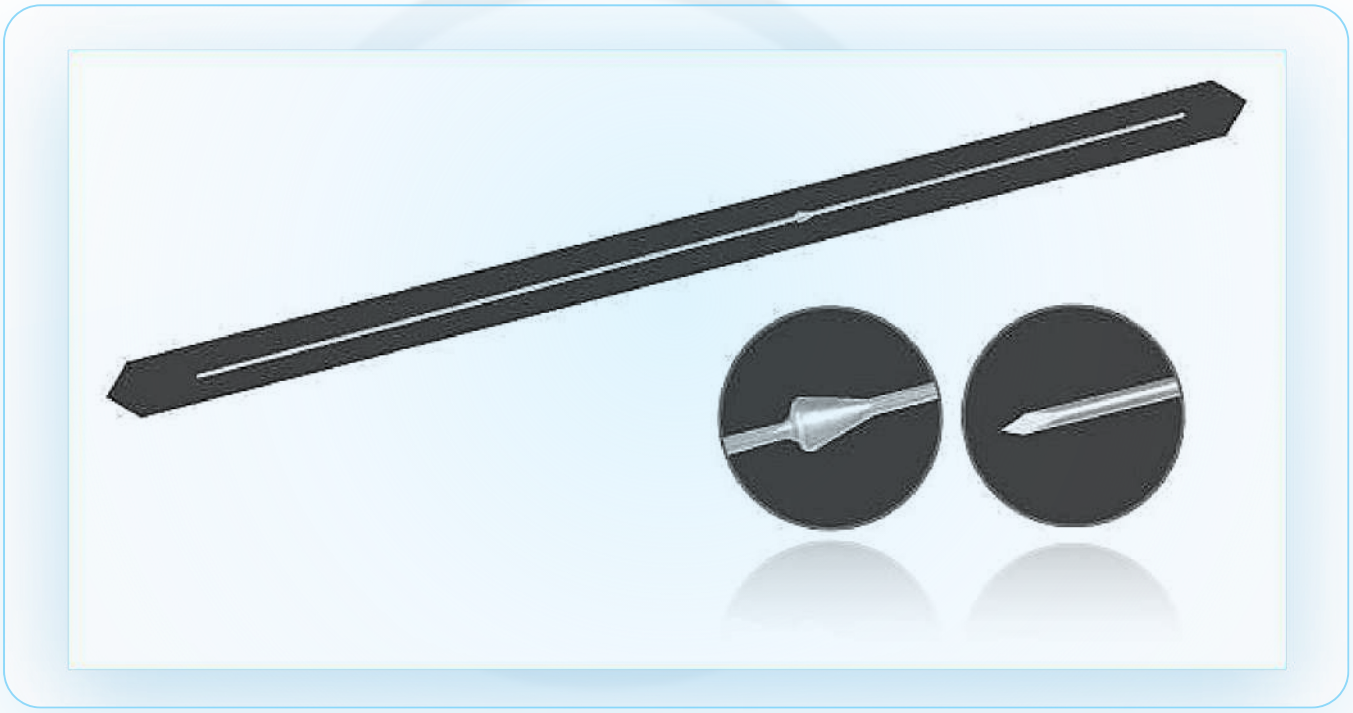

Olive Wire — Bayonet Point (Single-Piece Integral Olive, 1.8 mm)

Primary Use : Eliminates olive-wire weld failure in dense adult cortical bone.
Material : SS 316L (ASTM F138) & Ti-6Al-4V ELI (ASTM F136) • **Spec:** Ø 1.8 mm; lengths 350, 400 mm; integral machined single-piece olive

TITANIUM / CARBON (Prod. Code)	SS. 316L (Prod. Code)	SPECIFICATION (Diameter / Length)
[Assign Code]	[Assign Code]	150 mm Length
[Assign Code]	[Assign Code]	200 mm Length
[Assign Code]	[Assign Code]	250 mm Length
[Assign Code]	[Assign Code]	300 mm Length

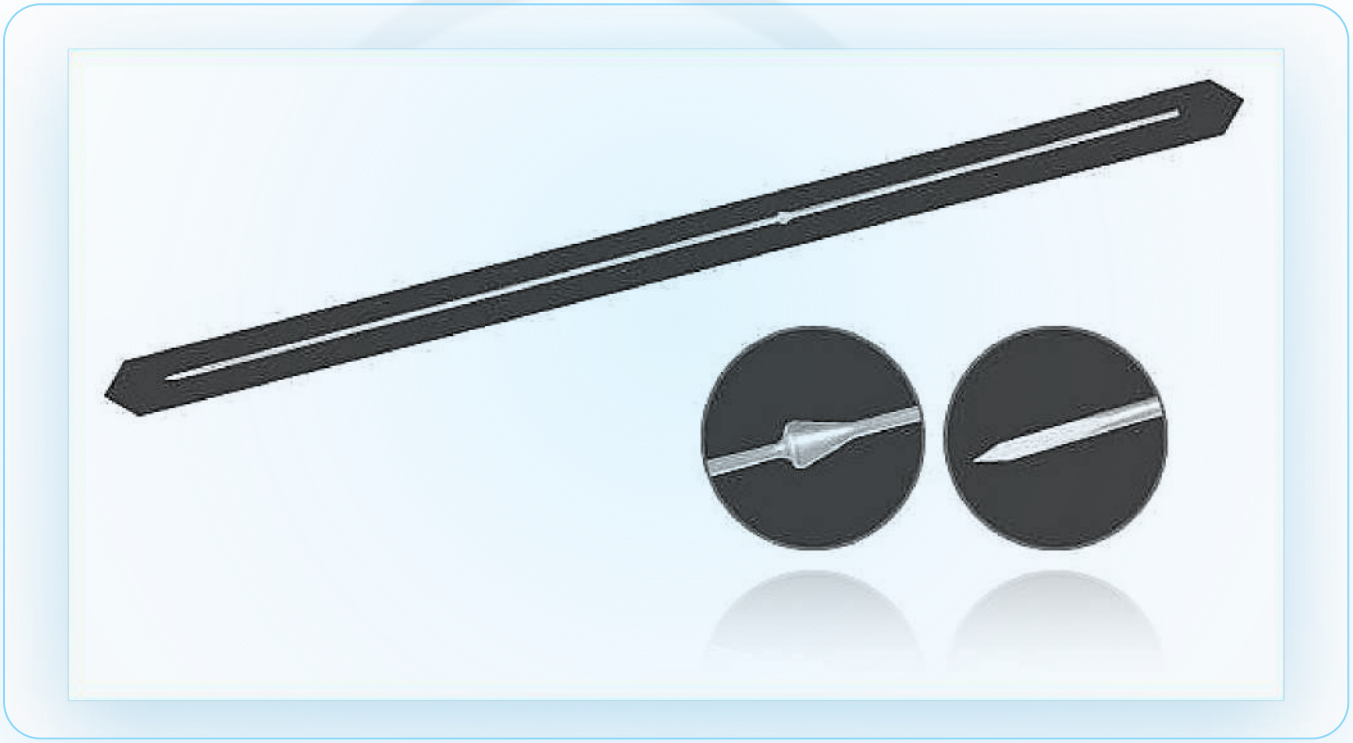

Stainless Steel Suture / Cerclage Wire — 16 SWG (1.60 mm)

Primary Use : Primary heavy-gauge cerclage wire for periprosthetic femur and subtrochanteric fractures.

Material : SS 316L (ASTM F138) & Ti-6Al-4V ELI (ASTM F136) • **Spec:** 16 SWG (Ø 1.60 mm); 10 m spool or 300/450 mm pre-cut lengths

TITANIUM / CARBON (Prod. Code)	SS. 316L (Prod. Code)	SPECIFICATION (Diameter / Length)
[Assign Code]	[Assign Code]	16 SWG (1.60 mm)
[Assign Code]	[Assign Code]	18 SWG (1.25 mm)
[Assign Code]	[Assign Code]	20 SWG (0.90 mm)
[Assign Code]	[Assign Code]	22 SWG (0.70 mm)



Braided Orthopedic Trauma Cable — Proximal Femur Cable Plate (1.7 mm / 2.0 mm)

147

Primary Use : Superior fatigue resistance and higher clamping force than monofilament wire.
Material : SS 316L (ASTM F138) & Ti-6Al-4V ELI (ASTM F136) • **Spec:** Ø 1.7 mm & 2.0 mm; lengths 600 – 900 mm; multi-strand SS / Ti + crimp

TITANIUM / CARBON (Prod. Code)	SS. 316L (Prod. Code)	SPECIFICATION (Diameter / Length)
[Assign Code]	[Assign Code]	150 mm Length
[Assign Code]	[Assign Code]	200 mm Length
[Assign Code]	[Assign Code]	250 mm Length
[Assign Code]	[Assign Code]	300 mm Length

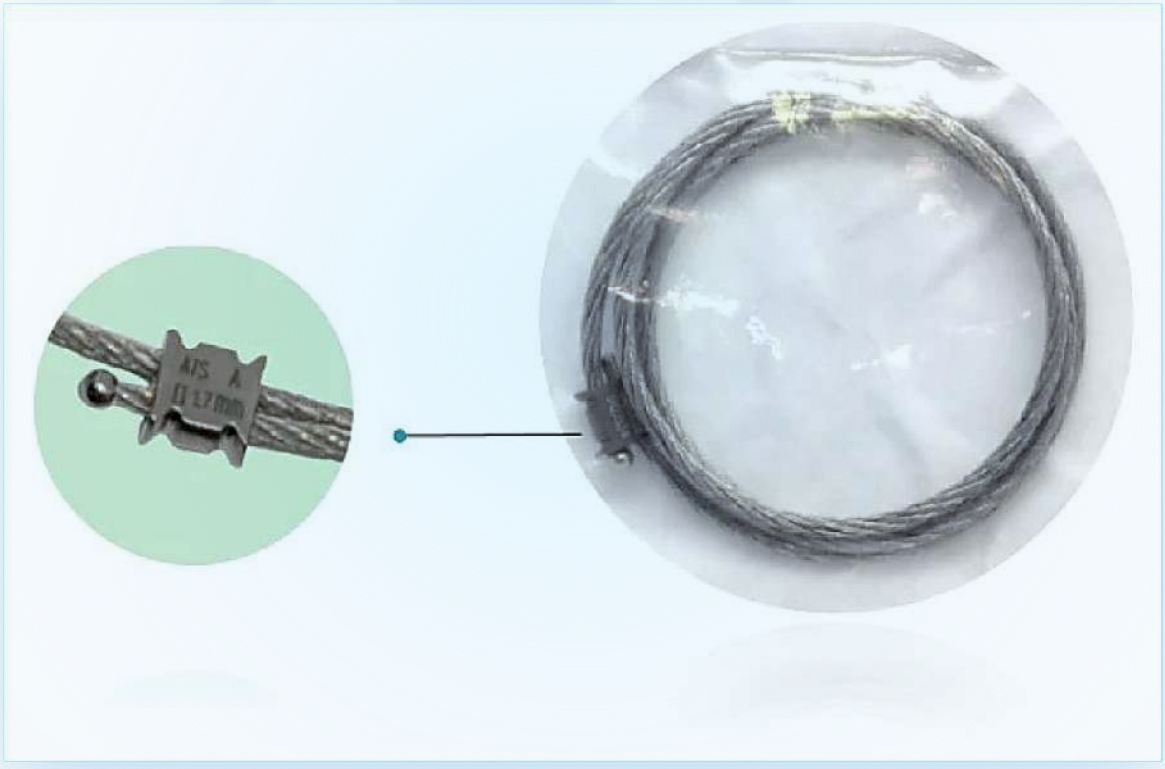

Locking Wire Mount (4.5 / 5.0 mm Locking Plate Cable Attachment)

148

Primary Use : Secures periprosthetic femoral plates cleanly around intramedullary stems.
Material : SS 316L (ASTM F138) & Ti-6Al-4V ELI (ASTM F136) • **Spec:** Threads into 4.5 / 5.0 mm LCP locking hole; accepts Ø 1.7–2.0 mm cable

TITANIUM / CARBON (Prod. Code)	SS. 316L (Prod. Code)	SPECIFICATION (Diameter / Length)
[Assign Code]	[Assign Code]	Ø 4.0 mm × 150 mm
[Assign Code]	[Assign Code]	Ø 4.5 mm × 175 mm
[Assign Code]	[Assign Code]	Ø 5.0 mm × 200 mm
[Assign Code]	[Assign Code]	Ø 6.0 mm × 250 mm



Occipital & Spinal Cable Connector (Titanium Ti-6Al-4V ELI)

149

Primary Use : Adjunctive sublaminar/occipital cable fixation in complex spine constructs.
Material : SS 316L (ASTM F138) & Ti-6Al-4V ELI (ASTM F136) • **Spec:** Fits 3.2/3.5 mm cervical rods & 1.0–1.5 mm sublaminar cables

TITANIUM / CARBON (Prod. Code)	SS. 316L (Prod. Code)	SPECIFICATION (Diameter / Length)
[Assign Code]	[Assign Code]	150 mm Length
[Assign Code]	[Assign Code]	200 mm Length
[Assign Code]	[Assign Code]	250 mm Length
[Assign Code]	[Assign Code]	300 mm Length



Wire Tension Dynamometer (Calibrated Ilizarov Wire Tensioner)

150

Primary Use : Applies reproducible 90–130 kg tension to Ilizarov and olive wires.
Material : SS 316L (ASTM F138) & Ti-6Al-4V ELI (ASTM F136) • **Spec:** Calibrated scale 0 – 130 kg; accepts Ø 1.5 mm – 2.0 mm wires

TITANIUM / CARBON (Prod. Code)	SS. 316L (Prod. Code)	SPECIFICATION (Diameter / Length)
[Assign Code]	[Assign Code]	150 mm Length
[Assign Code]	[Assign Code]	200 mm Length
[Assign Code]	[Assign Code]	250 mm Length
[Assign Code]	[Assign Code]	300 mm Length



Quality & Mechanical Standards

Manufactured in compliance with international external fixation benchmarks including **ASTM F1541** and **ISO 10993** biocompatibility requirements.

Packaging & Sterilization

Reusable frames supplied non-sterile (steam autoclave ready); Schanz pins, K-wires & HA-coated pins available sterile or non-sterile on order.

AXN Ortho — Corporate Headquarters

Company: AXN Ortho (Manufacturer, Supplier & Exporter of Orthopaedic Implants & Instruments)

Proprietor: Azharuddin

Address: Kaushik Enclave, Burari, New Delhi - 110084, India

Phone: +91 9958514586

Email: orthoaxn@gmail.com

Website: www.axnortho.com